Annexes

Autor(en): **[s.n.]**

Objekttyp: **Appendix**

Zeitschrift: **Mémoires de la Société Vaudoise des Sciences Naturelles**

Band (Jahr): **20 (1999-2006)**

Heft 2

PDF erstellt am: **06.08.2024**

Nutzungsbedingungen

Die ETH-Bibliothek ist Anbieterin der digitalisierten Zeitschriften. Sie besitzt keine Urheberrechte an den Inhalten der Zeitschriften. Die Rechte liegen in der Regel bei den Herausgebern.
Die auf der Plattform e-periodica veröffentlichten Dokumente stehen für nicht-kommerzielle Zwecke in Lehre und Forschung sowie für die private Nutzung frei zur Verfügung. Einzelne Dateien oder Ausdrucke aus diesem Angebot können zusammen mit diesen Nutzungsbedingungen und den korrekten Herkunftsbezeichnungen weitergegeben werden.
Das Veröffentlichen von Bildern in Print- und Online-Publikationen ist nur mit vorheriger Genehmigung der Rechteinhaber erlaubt. Die systematische Speicherung von Teilen des elektronischen Angebots auf anderen Servern bedarf ebenfalls des schriftlichen Einverständnisses der Rechteinhaber.

Haftungsausschluss

Alle Angaben erfolgen ohne Gewähr für Vollständigkeit oder Richtigkeit. Es wird keine Haftung übernommen für Schäden durch die Verwendung von Informationen aus diesem Online-Angebot oder durch das Fehlen von Informationen. Dies gilt auch für Inhalte Dritter, die über dieses Angebot zugänglich sind.

Ein Dienst der *ETH-Bibliothek*
ETH Zürich, Rämistrasse 101, 8092 Zürich, Schweiz, www.library.ethz.ch

http://www.e-periodica.ch

GŒLDLIN *et al.* 2003. Les insectes indicateurs.
ANNEXE 1

Piège fenêtre à quatre pans, ou piège Suzy. Les insectes qui butent sur les parois verticales en plexiglas transparent sont collectés via un entonnoir dans un réservoir rempli d 'éthylène-glycol 15%.

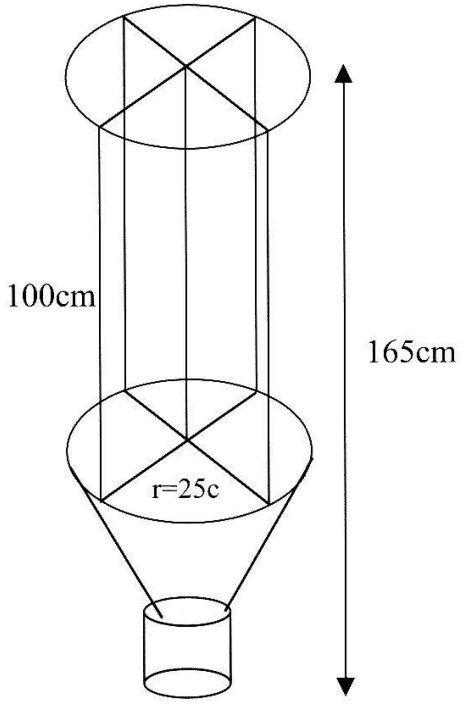

Tente « malaise » de modèle conventionnel en nylon noir. Ce piège d 'interception capture les insectes qui tentent de le contourner par le haut. Le récipient collecteur est rempli d 'alcool méthylique.

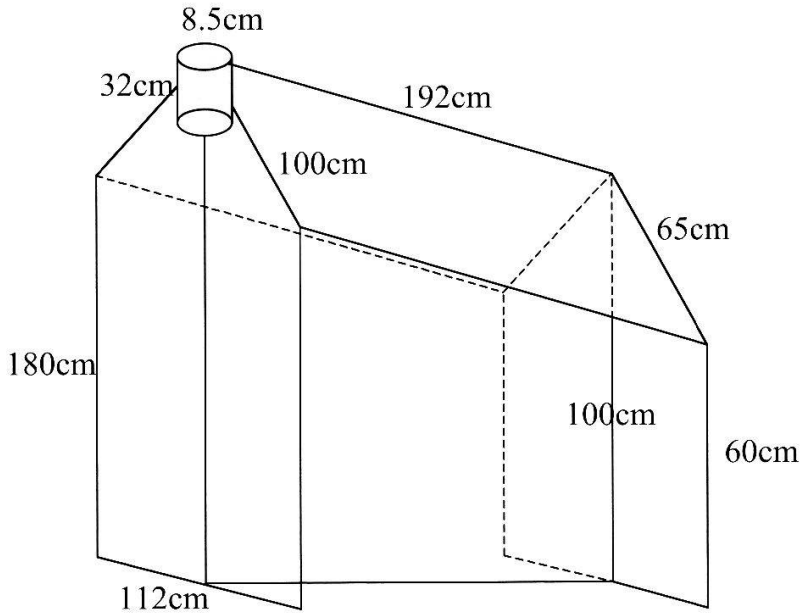

LOCALISATION ET DESCRIPTION DES STATIONS D'ECHANTILLONNAGE

Lieu-dit	Coordonnées	Altitude	Type de végétation	Malaises	Pièges Susy	Pièges bostryches	1997	1998	1999
Le Motta	518.679/163.134 518.622/163.212	830-40	hêtraie à cardamine humide,source/mosaïque	2	1	2	+	+	+
Roches Blanches	515.841/162.135 515.787/162.132	1375-90	hêtraie-sapinière sèche (sol superficiel)	2	1	2	+	+	+
Les Dailles	518.046/160.449 517.780/160.511	735-60	hêtraie à cardamine tend. neutrophile, vieille futaie	2	1	2		+	
Le Devens	518.169/162.599 518.197/162.685	860	hêtraie à cardamine typique,futaie moyenne	2	1	2		+	
Petit Essert	518.864/163.371 518.951/163.381	820-30	hêtraie à cardamine tend. neutrophile, vieille futaie	2	1	2		+	
Combe aux Français	517.613/160.430	830	hêtraie à cardamine typique, recrû			2		+	
Les Ages	517.949/161891	840	hêtraie à cardamine tend.neutrophile, futaie moyenne			2		+	
Grand Essert	518.988/163.778	850	hêtraie à millet, vieille futaie			2		+	
Crête de la Verrière	517.255/162.515 517.249/162.563	1110-30	hêtraie des crêtes à seslérie	2	1	2			+
Les Soupiats	515.196/161.026 515.323/160.979	1415-25	hêtraie-sapinière typique + taches de hêt. à érable	2	1	2			+
Chalet du Mont Tendre	514.569/161.520 514.546/161.492	1580-85	forêt parcourue ("pessière du Jura")	2	1	2			+
Combe de la Verrière	517.137/162.178	930	érablaie de ravin à lunaire (sol profond, frais)			2			+
Grande Baume	514.911/160.600	1375	hêtraie-sapinière à myrtille (lapiaz)			2			+

Doubles coordonnées: position des deux tentes malaises

1997 : Le Motta

SCOLYTIDAE	Suspendu	Bostryches I	Bostryches II	Bostryches I + II	Malaise I	Malaise II	Malaise I + II	Bière (1 ; 2 ; 3 & 4)	Coloré (1 ; 2 ; 3 & 4)	**Total**
Cryphalus piceae	1	0	0	0	2	0	2	0	0	**3**
Dryocoetes autographus	0	0	0	0	0	0	0	0	1	**1**
Ernoporus fagi	7	0	0	0	0	0	0	1	0	**8**
Pityogenes chalcographus	0	0	2	2	3	0	3	0	1	**6**
Pityophthorus pityographus	1	0	0	0	0	0	0	0	1	**2**
Taphrorychus bicolor	2	0	0	0	0	0	0	0	0	**2**
Taphrorychus villifrons	0	1	0	1	0	0	0	0	0	**1**
Trypodendron lineatum	3	0	0	0	0	6	6	0	0	**9**
Xyleborus dispar	1	0	1	1	1	0	1	0	0	**3**
Xyleborus germanus	0	0	0	0	1	0	1	0	0	**1**
Xyleborus saxeseni	0	0	0	0	1	0	1	0	0	**1**
Xylechinus pilosus	0	0	0	0	0	0	0	0	1	**1**
									Total général	**38**

CERAMBYCIDAE	Suspendu	Bostryches I	Bostryches II	Bostryches I + II	Malaise I	Malaise II	Malaise I + II	Bière (1 ; 2 ; 3 & 4)	Coloré (1 ; 2 ; 3 & 4)	**Total**
Agapanthia villosoviridescens	0	0	0	0	1	0	1	0	0	**1**
Alosterna tabacicolor	0	0	0	0	2	0	2	0	0	**2**
Clytus arietis	0	0	0	0	0	1	1	0	0	**1**
Corymbia rubra	3	0	0	0	5	4	9	0	1	**13**
Leptura maculata	0	0	0	0	10	7	17	1	0	**18**
Obrium brunneum	1	0	0	0	0	0	0	0	1	**2**
Pachytodes cerambyciformis	0	0	0	0	2	0	2	0	0	**2**
Rhagium bifasciatum	0	0	0	0	0	1	1	0	0	**1**
Stenurella melanura	1	0	0	0	15	8	23	0	0	**24**
									Total général	**64**

LUCANIDAE	Suspendu	Bostryches I	Bostryches II	Bostryches I + II	Malaise I	Malaise II	Malaise I + II	Bière (1 ; 2 ; 3 & 4)	Coloré (1 ; 2 ; 3 & 4)	**Total**
Platycerus caprea	0	1	0	1	0	0	0	0	0	**1**
									Total général	**1**

1997 : Roches Blanches

SCOLYTIDAE	Suspendu	Bostryches I	Bostryches II	Bostr. I + II	Malaise I	Malaise II	Malaise I + II	Piège à bière	Plat. coloré	**Total**
Cryphalus piceae	0	0	0	0	1	0	1	0	0	**1**
Crypturgus cinereus	14	0	0	0	0	0	0	0	0	**14**
Crypturgus pusillus	8	1	2	3	3	1	4	0	0	**15**
Dryocoetes autographus	10	14	8	22	0	0	0	0	1	**33**
Ernoporus fagi	2	0	0	0	0	0	0	0	0	**2**
Hylastes attenuatus	0	0	1	1	1	1	2	0	0	**3**
Hylastes cunicularius	23	9	20	29	32	7	39	0	8	**99**
Ips amitinus	2	6	0	6	1	0	1	0	0	**9**
Ips typographus	20	27	2	29	9	0	9	0	3	**61**
Orthotomicus laricis	0	0	3	3	0	0	0	0	3	**6**
Phthorophloeus spinulosus	1	1	0	1	0	1	1	0	0	**3**
Pityogenes chalcographus	53	37	1	38	7	1	8	0	4	**103**
Pityophthorus pityographus	23	2	1	3	0	0	0	0	0	**26**
Polygraphus poligraphus	0	1	0	1	0	0	0	0	0	**1**
Trypodendron domesticum	0	0	0	0	0	1	1	0	0	**1**
Trypodendron lineatum	67	79	20	99	6	3	9	0	43	**218**
Xyleborus germanus	0	0	0	0	1	0	1	0	0	**1**
									Total général	**596**

CERAMBYCIDAE	Suspendu	Bostryches I	Bostryches II	Bostr. I + II	Malaise I	Malaise II	Malaise I + II	Piège à bière	Plat. coloré	**Total**
Anastrangalia dubia	0	0	0	0	0	1	1	0	0	**1**
Anastrangalia sanguinolenta	0	1	0	1	10	0	10	0	0	**11**
Corymbia rubra	0	0	0	0	0	0	0	0	2	**2**
Gaurotes virginea	0	0	0	0	0	1	1	0	0	**1**
Oxymirus cursor	1	0	0	0	1	0	1	0	0	**2**
Pidonia lurida	0	0	0	0	1	1	2	0	0	**2**
Rhagium bifasciatum	0	0	0	0	1	0	1	0	0	**1**
Rhagium inquisitor	0	0	1	1	0	0	0	0	0	**1**
Stenurella melanura	0	0	0	0	10	1	11	0	0	**11**
Tetropium castaneum	0	0	0	0	0	1	1	0	0	**1**
Tetropium cf. fuscum	1	1	0	1	0	0	0	0	2	**4**
									Total général	**37**

BUPRESTIDAE	Suspendu	Bostryches I	Bostryches II	Bostr. I + II	Malaise I	Malaise II	Malaise I + II	Piège à bière	Plat. coloré	**Total**
Anthaxia helvetica	0	0	0	0	1	1	2	0	23	**25**
Anthaxia quadripunctata	0	0	0	0	0	0	0	0	32	**32**
									Total général	**57**

1998 : Le Motta

SCOLYTIDAE	Suspendu	Bostryches I	Bostryches II	Bostryches I + II	Malaise I	Malaise II	Malaise I + II	**TOTAL**
Cryphalus abietis	0	1	0	1	0	0	0	**1**
Cryphalus piceae	1	0	1	1	4	2	6	**8**
Dryocoetes autographus	1	1	1	2	0	0	0	**3**
Ernoporus fagi	2	0	0	0	0	0	0	**2**
Hylurgops palliatus	0	13	0	13	0	0	0	**13**
Ips typographus	0	0	0	0	1	0	1	**1**
Leperisinus varius	0	0	0	0	0	3	3	**3**
Pityogenes chalcographus	1	9	2	11	1	0	1	**13**
Trypodendron domesticum	1	0	0	0	0	0	0	**1**
Trypodendron lineatum	1	17	0	17	4	0	4	**22**
Xyleborus dispar	0	1	1	2	0	0	0	**2**
Xyleborus germanus	0	1	0	1	2	1	3	**4**
Xyleborus saxeseni	1	0	0	0	0	0	0	**1**
							Total général	**74**

CERAMBYCIDAE	Suspendu	Bostryches I	Bostryches II	Bostryches I + II	Malaise I	Malaise II	Malaise I + II	**TOTAL**
Agapanthia villosoviridescens	0	0	0	0	1	0	1	**1**
Alosterna tabacicolor	0	0	0	0	0	3	3	**3**
Anaglyptus mysticus	0	0	0	0	1	2	3	**3**
Clytus arietis	0	0	0	0	0	1	1	**1**
Corymbia rubra	0	0	0	0	1	4	5	**5**
Leptura maculata	0	0	0	0	0	2	2	**2**
Oberea pupillata	0	0	0	0	0	1	1	**1**
Pachytodes cerambyciformis	0	0	0	0	0	3	3	**3**
Pogonocherus hispidulus	0	0	0	0	0	1	1	**1**
Rhagium mordax	0	0	0	0	1	0	1	**1**
Stenurella melanura	1	0	2	2	1	32	33	**36**
							Total général	**57**

LUCANIDAE	Suspendu	Bostryches I	Bostryches II	Bostryches I + II	Malaise I	Malaise II	Malaise I + II	**TOTAL**
Platycerus caprea	0	4	1	5	0	0	0	**5**
							Total général	**5**

1998 : Roches Blanches

SCOLYTIDAE	Suspendu	Bostryches I	Bostryches II	Bostr. I + II	Malaise I	Malaise II	Malaise I + II	TOTAL
Cryphalus piceae	0	0	0	0	0	1	1	**1**
Crypturgus cinereus	4	3	0	3	0	1	1	**8**
Crypturgus hispidulus	0	2	0	2	1	0	1	**3**
Crypturgus pusillus	2	5	1	6	4	1	5	**13**
Dryocoetes autographus	11	23	0	23	1	1	2	**36**
Dryocoetes hectographus	4	0	1	1	0	0	0	**5**
Ernoporus fagi	1	0	0	0	0	0	0	**1**
Hylastes cunicularius	5	29	1	30	5	43	48	**83**
Hylurgops palliatus	0	1	1	2	0	77	77	**79**
Ips typographus	0	0	1	1	0	2	2	**3**
Phthorophloeus spinulosus	0	1	0	1	1	0	1	**2**
Pityogenes chalcographus	40	21	13	34	1	14	15	**89**
Pityophthorus pityographus	2	2	0	2	0	0	0	**4**
Polygraphus poligraphus	0	2	1	3	0	0	0	**3**
Taphrorychus villifrons	0	1	0	1	0	0	0	**1**
Trypodendron domesticum	0	0	0	0	0	1	1	**1**
Trypodendron lineatum	7	38	3	41	0	12	12	**60**
							Total général	**392**

CERAMBYCIDAE	Suspendu	Bostryches I	Bostryches II	Bostr. I + II	Malaise I	Malaise II	Malaise I + II	TOTAL
Acmaeops septentrionis	0	0	0	0	0	1	1	**1**
Alosterna tabacicolor	0	0	0	0	4	0	4	**4**
Anastrangalia dubia	0	0	0	0	1	2	3	**3**
Anastrangalia sanguinolenta	0	1	0	1	4	0	4	**5**
Clytus arietis	1	0	0	0	0	0	0	**1**
Corymbia rubra	0	0	0	0	1	0	1	**1**
Leptura maculata	0	0	0	0	2	0	2	**2**
Molorchus minor	1	0	0	0	0	0	0	**1**
Pogonocherus fasciculatus	0	0	0	0	0	1	1	**1**
Rhagium inquisitor	0	0	0	0	0	6	6	**6**
Rhagium mordax	0	0	0	0	0	1	1	**1**
Stenurella melanura	0	0	0	0	40	9	49	**49**
Tetropium castaneum	1	0	0	0	0	0	0	**1**
							Total général	**76**

BUPRESTIDAE	Suspendu	Bostryches I	Bostryches II	Bostr. I + II	Malaise I	Malaise II	Malaise I + II	TOTAL
Agrilus viridis	0	0	0	0	1	0	1	**1**
							Total général	**1**

1998 : Petit Essert

SCOLYTIDAE	Suspendu	Bostryches I	Bostryches II	Bostryches I + II	Malaise I	Malaise II	Malaise I + II	TOTAL
Cryphalus abietis	8	1	0	1	0	0	0	**9**
Cryphalus piceae	14	4	5	9	5	2	7	**30**
Crypturgus cinereus	0	2	4	6	0	0	0	**6**
Crypturgus pusillus	0	10	2	12	2	0	2	**14**
Dryocoetes autographus	2	0	1	1	0	0	0	**3**
Ernoporus fagi	9	0	0	0	0	0	0	**9**
Hylastes cunicularius	1	1	0	1	0	0	0	**2**
Hylastinus obscurus	0	0	0	0	0	1	1	**1**
Ips typographus	1	0	0	0	0	0	0	**1**
Leperisinus varius	1	0	0	0	2	0	2	**3**
Phloeophthorus rhododactylus	0	0	0	0	0	1	1	**1**
Pityogenes chalcographus	3	10	0	10	1	0	1	**14**
Pityokteines curvidens	4	0	0	0	0	0	0	**4**
Pityophthorus pityographus	26	8	1	9	0	0	0	**35**
Taphrorychus bicolor	1	1	1	2	1	0	1	**4**
Taphrorychus villifrons	12	0	3	3	0	0	0	**15**
Trypodendron lineatum	4	1	0	1	0	0	0	**5**
Xyleborus dispar	1	0	0	0	0	1	1	**2**
Xyleborus saxeseni	7	29	13	42	0	0	0	**49**
								207

CERAMBYCIDAE	Suspendu	Bostryches I	Bostryches II	Bostryches I + II	Malaise I	Malaise II	Malaise I + II	TOTAL
Alosterna tabacicolor	0	0	0	0	2	2	4	**4**
Anastrangalia dubia	0	0	0	0	0	1	1	**1**
Anastrangalia sanguinolenta	0	1	0	1	0	0	0	**1**
Clytus arietis	0	4	0	4	2	0	2	**6**
Corymbia rubra	0	0	0	0	1	0	1	**1**
Dinoptera collaris	0	0	0	0	1	0	1	**1**
Gaurotes virginea	0	1	0	1	0	0	0	**1**
Leptura maculata	1	0	0	0	4	2	6	**7**
Pachytodes cerambyciformis	0	0	0	0	3	2	5	**5**
Phyllopertha hoirticola	0	0	0	0	0	2	2	**2**
Rhagium inquisitor	0	2	0	2	0	0	0	**2**
Rhagium mordax	0	0	0	0	1	1	2	**2**
Serica brunnea	0	0	0	0	0	1	1	**1**
Stenocorus meridianus	0	0	1	1	0	1	1	**2**
Stenurella melanura	1	0	1	1	3	9	12	**14**
Tetropium castaneum	2	0	0	0	0	0	0	**2**
								52

BUPRESTIDAE	Suspendu	Bostryches I	Bostryches II	Bostryches I + II	Malaise I	Malaise II	Malaise I + II	TOTAL
Anthaxia similis	0	0	0	0	0	1	1	**1**
Agrilus viridis	0	3	0	3	0	0	0	**3**

1998 : Le Devens

SCOLYTIDAE	Suspendu	Bostryches I	Bostryches II	Bostryches I + II	Malaise I	Malaise II	Malaise I + II	TOTAL
Cryphalus abietis	2	0	0	0	0	0	0	**2**
Cryphalus piceae	2	0	0	0	1	0	1	**3**
Ernoporus fagi	7	0	0	0	0	0	0	**7**
Hylastes cunicularius	0	1	0	1	0	0	0	**1**
Hylastinus fankhauseri	0	1	0	1	3	0	3	**4**
Hylastinus obscurus	0	0	0	0	1	0	1	**1**
Hylurgops palliatus	0	0	0	0	4	0	4	**4**
Pityogenes chalcographus	2	0	0	0	0	0	0	**2**
Pityophthorus pityographus	4	0	0	0	0	0	0	**4**
Taphrorychus bicolor	0	2	0	2	0	0	0	**2**
Taphrorychus villifrons	3	0	1	1	0	0	0	**4**
Trypodendron domesticum	1	0	0	0	0	0	0	**1**
Trypodendron lineatum	1	0	0	0	0	0	0	**1**
Trypodendron signatum	2	0	0	0	0	0	0	**2**
Xyleborus dispar	0	0	1	1	0	0	0	**1**
Xyleborus germanus	1	1	3	4	0	0	0	**5**
Xyleborus saxeseni	5	2	0	2	0	0	0	**7**
								51

CERAMBYCIDAE	Suspendu	Bostryches I	Bostryches II	Bostryches I + II	Malaise I	Malaise II	Malaise I + II	TOTAL
Anaglyptus mysticus	0	1	0	1	0	0	0	**1**
Anastrangalia dubia	0	0	0	0	2	0	2	**2**
Corymbia rubra	0	0	0	0	1	0	1	**1**
Obrium brunneum	0	0	0	0	1	0	1	**1**
Oxymirus cursor	0	0	0	0	1	0	1	**1**
Pachytodes cerambyciformis	0	0	0	0	1	0	1	**1**
Pogonocherus hispidulus	0	0	0	0	0	1	1	**1**
Stenocorus meridianus	0	0	0	0	2	0	2	**2**
Stenurella melanura	0	0	0	0	1	0	1	**1**
								11

LUCANIDAE	Suspendu	Bostryches I	Bostryches II	Bostryches I + II	Malaise I	Malaise II	Malaise I + II	TOTAL
Platycerus caprea	0	1	0	1	0	0	0	**1**
								1

1998 Les Dailles

SCOLYTIDAE	Suspendu	Bostryches I	Bostryches II	Bostr. I + II	Malaise I	Malaise II	Malaise I + II	TOTAL
Cryphalus abietis	1	0	0	0	0	0	0	**1**
Cryphalus piceae	4	0	0	0	0	0	0	**4**
Crypturgus cinereus	0	0	0	0	0	1	1	**1**
Crypturgus pusillus	1	0	1	1	0	0	0	**2**
Dryocoetes autographus	1	3	2	5	0	0	0	**6**
Dryocoetes hectographus	0	1	0	1	0	0	0	**1**
Ernoporus fagi	78	0	0	0	1	0	1	**79**
Hylastinus fankhauseri	1	0	1	1	1	0	1	**3**
Leperisinus varius	1	0	0	0	0	0	0	**1**
Phloeophthorus rhododactylus	0	0	0	0	3	0	3	**3**
Phthorophloeus spinulosus	1	0	0	0	0	0	0	**1**
Pityogenes chalcographus	1	1	5	6	0	1	1	**8**
Pityophthorus pityographus	3	2	3	5	0	2	2	**10**
Taphrorychus bicolor	3	1	2	3	0	0	0	**6**
Trypodendron domesticum	1	0	0	0	0	0	0	**1**
Trypodendron lineatum	0	0	0	0	0	1	1	**1**
Trypodendron signatum	1	0	0	0	0	0	0	**1**
Xyleborus dispar	27	14	0	14	0	0	0	**41**
Xyleborus germanus	39	143	31	174	0	0	0	**213**
Xyleborus saxeseni	54	9	7	16	0	1	1	**71**
								454

CERAMBYCIDAE	Suspendu	Bostryches I	Bostryches II	Bostr. I + II	Malaise I	Malaise II	Malaise I + II	TOTAL
Acmaeops septentrionis	0	0	0	0	0	1	1	**1**
Agapanthia villosoviridescens	0	0	0	0	0	1	1	**1**
Alosterna tabacicolor	0	0	0	0	0	1	1	**1**
Anastrangalia dubia	0	0	0	0	0	1	1	**1**
Anastrangalia sanguinolenta	0	0	0	0	0	1	1	**1**
Clytus arietis	1	0	0	0	1	1	2	**3**
Corymbia rubra	0	0	2	2	0	9	9	**11**
Leptura maculata	0	0	1	1	3	2	5	**6**
Obrium brunneum	1	0	0	0	0	0	0	**1**
Oxymirus cursor	0	0	0	0	0	1	1	**1**
Pachytodes cerambyciformis	0	0	0	0	0	4	4	**4**
Rhagium inquisitor	0	0	0	0	0	1	1	**1**
Rhagium mordax	0	0	0	0	1	3	4	**4**
Stenurella melanura	0	3	0	3	0	5	5	**8**
								44

BUPRESTIDAE	Suspendu	Bostryches I	Bostryches II	Bostr. I + II	Malaise I	Malaise II	Malaise I + II	TOTAL
Agrilus angustulus	0	0	0	0	0	1	1	**1**
								1

LUCANIDAE	Suspendu	Bostryches I	Bostryches II	Bostr. I + II	Malaise I	Malaise II	Malaise I + II	TOTAL
Platycerus caprea	0	1	0	1	0	0	0	**1**
								1

GŒLDLIN *et al.* 2003. Les insectes indicateurs.
ANNEXE 4.6

1998 : Combe aux Français

SCOLYTIDAE	Bostryches I	Bostryches II	TOTAL
Cryphalus piceae	0	1	**1**
Crypturgus cinereus	4	8	**12**
Crypturgus pusillus	2	3	**5**
Dryocoetes autographus	13	2	**15**
Dryocoetes hectographus	2	1	**3**
Hylastes cunicularius	11	3	**14**
Hylastinus fankhauseri	0	1	**1**
Hylurgops palliatus	1	0	**1**
Ips typographus	1	0	**1**
Phthorophloeus spinulosus	0	1	**1**
Pityogenes chalcographus	17	17	**34**
Pityophthorus pityographus	8	52	**60**
Taphrorychus bicolor	1	0	**1**
Trypodendron lineatum	2	1	**3**
Xyleborus germanus	48	80	**128**
Xyleborus saxeseni	2	6	**8**
			288

CERAMBYCIDAE	Bostryches I	Bostryches II	TOTAL
Clytus arietis	1	0	**1**
Corymbia rubra	2	0	**2**
Leptura aurulenta	0	1	**1**
Sinodendron cylindricum	0	2	**2**
Stenurella melanura	2	1	**3**
			9

1998 : Les Ages

SCOLYTIDAE	Bostryches I	Bostryches II	TOTAL
Crypturgus pusillus	0	1	**1**
Hylastes cunicularius	0	1	**1**
Trypodendron lineatum	0	1	**1**
Xyleborus germanus	2	1	**3**
			6

GŒLDLIN *et al.* 2003. Les insectes indicateurs.
ANNEXE 4.7

1998 : Grand Essert

ANNEXE 4

SCOLYTIDAE	Bostryches I	Bostryches II	TOTAL
Cryphalus abietis	1	0	**1**
Cryphalus piceae	100	11	**111**
Crypturgus cinereus	2	2	**4**
Crypturgus pusillus	11	0	**11**
Dryocoetes autographus	1	1	**2**
Ernoporus fagi	0	1	**1**
Hylastes cunicularius	3	1	**4**
Hylastinus fankhauseri	0	1	**1**
Hylastinus obscurus	1	0	**1**
Leperisinus varius	1	1	**2**
Orthotomicus laricis	1	0	**1**
Phthorophloeus spinulosus	0	1	**1**
Pityogenes chalcographus	3	2	**5**
Pityokteines curvidens	1	4	**5**
Pityophthorus pityographus	6	3	**9**
Scolytus intricatus	1	0	**1**
Taphrorychus bicolor	0	1	**1**
Taphrorychus villifrons	1	1	**2**
Trypodendron lineatum	3	9	**12**
Trypodendron signatum	0	1	**1**
Xyleborus dispar	0	2	**2**
Xyleborus saxeseni	1	9	**10**
			188

CERAMBYCIDAE	Bostryches I	Bostryches II	TOTAL
Acmaeops septentrionis	0	1	**1**
Anastrangalia dubia	1	1	**2**
Anastrangalia sanguinolenta	0	1	**1**
Clytus arietis	1	0	**1**
Pachytodes cerambyciformis	0	1	**1**
Pyrrhidium sanguineum	3	0	**3**
Rhagium bifasciatum	0	2	**2**
			11

BUPRESIDAE	Bostryches I	Bostryches II	TOTAL
Anthaxia helvetica	0	1	**1**
			1

LUCANIDAE	Bostryches I	Bostryches II	TOTAL
Platycerus caprea	1	2	**3**
			3

1999 : Le Motta

SCOLYTIDAE	Suspendu	Bostryches I	Bostryches II	Bostr. I + II	Malaise I	Malaise II	Malaise I + II	TOTAL
Cryphalus abietis	0	0	0	0	1	1	2	**2**
Cryphalus piceae	0	0	0	0	9	2	11	**11**
Crypturgus hispidulus	0	0	0	0	1	0	1	**1**
Dryocoetes autographus	7	0	1	1	0	0	0	**8**
Ernoporus fagi	2	0	0	0	0	0	0	**2**
Hylastes cunicularius	6	0	0	0	1	2	3	**9**
Hylastinus obscurus	1	0	0	0	4	0	4	**5**
Hylurgops palliatus	3	0	0	0	0	2	2	**5**
Ips typographus	0	0	0	0	1	0	1	**1**
Leperisinus varius	0	0	0	0	2	0	2	**2**
Pityogenes chalcographus	1	1	0	1	3	0	3	**5**
Pityophthorus pityographus	0	0	0	0	1	0	1	**1**
Trypodendron domesticum	1	0	0	0	0	0	0	**1**
Trypodendron lineatum	7	2	0	2	0	0	0	**9**
Trypodendron signatum	0	0	0	0	1	0	1	**1**
Xyleborus dispar	0	14	0	14	0	2	2	**16**
Xyleborus germanus	2	7	13	20	0	0	0	**22**
Xyleborus saxeseni	6	14	4	18	0	0	0	**24**
								125

CERAMBYCIDAE	Suspendu	Bostryches I	Bostryches II	Bostr. I + II	Malaise I	Malaise II	Malaise I + II	TOTAL
Clytus arietis	0	0	0	0	1	0	1	**1**
Corymbia rubra	0	0	0	0	0	1	1	**1**
Leptura maculata	0	0	0	0	0	1	1	**1**
Obrium brunneum	1	0	0	0	0	0	0	**1**
Pachytodes cerambyciformis	0	0	0	0	0	1	1	**1**
Rhagium inquisitor	0	0	0	0	0	1	1	**1**
Rhagium mordax	0	1	0	1	4	9	13	**14**
Stenurella melanura	0	0	0	0	1	4	5	**5**
								25

LUCANIDE	Suspendu	Bostryches I	Bostryches II	Bostr. I + II	Malaise I	Malaise II	Malaise I + II	TOTAL
Platycerus caprea	0	3	0	3	0	0	0	**3**
								3

1999 : Roches Blanches

SCOLYTIDAE	Suspendu	Bostryches I	Bostryches II	Bost. I + II	Malaise I	Malaise II	Malaise I + II	**TOTAL**
Cryphalus abietis	1	0	0	0	0	0	0	**1**
Cryphalus piceae	0	0	0	0	1	0	1	**1**
Crypturgus cinereus	1	0	2	2	0	0	0	**3**
Crypturgus hispidulus	13	0	6	6	2	10	12	**31**
Crypturgus pusillus	1	0	2	2	0	2	2	**5**
Dendroctonus micans	0	0	0	0	1	0	1	**1**
Dryocoetes autographus	35	6	17	23	0	1	1	**59**
Dryocoetes hectographus	14	3	5	8	0	1	1	**23**
Ernoporus fagi	2	0	0	0	0	0	0	**2**
Hylastes cunicularius	24	126	130	256	8	141	149	**429**
Hylastinus obscurus	2	0	0	0	7	2	9	**11**
Hylurgops palliatus	0	0	0	0	0	4	4	**4**
Ips typographus	0	0	1	1	0	0	0	**1**
Phthorophloeus spinulosus	0	0	1	1	0	1	1	**2**
Pityogenes chalcographus	13	4	4	8	1	2	3	**24**
Pityophthorus pityographus	25	1	1	2	0	0	0	**27**
Polygraphus poligraphus	2	4	1	5	0	0	0	**7**
Trypodendron lineatum	8	0	0	0	0	0	0	**8**
Xyleborus dispar	3	0	0	0	0	1	1	**4**
Xyleborus germanus	0	0	0	0	0	3	3	**3**
							Total général	**646**

CERAMBYCIDAE	Suspendu	Bostryches I	Bostryches II	Bost. I + II	Malaise I	Malaise II	Malaise I + II	**TOTAL**
Alosterna tabacicolor	0	0	0	0	7	2	9	**9**
Anastrangalia sanguinolenta	0	0	0	0	0	3	3	**3**
Clytus arietis	0	0	0	0	2	1	3	**3**
Gaurotes virginea	1	0	0	0	0	0	0	**1**
Molorchus minor	0	0	0	0	1	0	1	**1**
Oxymirus cursor	0	0	2	2	1	3	4	**6**
Pidonia lurida	0	0	0	0	0	2	2	**2**
Rhagium inquisitor	0	0	1	1	0	4	4	**5**
Rhagium mordax	0	0	0	0	0	3	3	**3**
Stenurella melanura	0	0	0	0	2	1	3	**3**
							Total général	**36**

GŒLDLIN *et al.* 2003. Les insectes indicateurs.
ANNEXE 4.10

1999 : Crête de la Verrière

SCOLYTIDAE	Suspendu	Bostryches I	Bostryches II	Bostryches I + II	Malaise I	Malaise II	Malaise I + II	**TOTAL**
Cryphalus abietis	1	0	0	0	0	0	0	**1**
Cryphalus piceae	0	0	1	1	0	0	0	**1**
Crypturgus cinereus	1	0	0	0	0	0	0	**1**
Crypturgus hispidulus	0	0	2	2	0	0	0	**2**
Dryocoetes autographus	1	0	0	0	0	0	0	**1**
Dryocoetes hectographus	2	0	0	0	0	0	0	**2**
Ernoporus fagi	26	0	0	0	0	0	0	**26**
Hylastes cunicularius	4	1	0	1	0	0	0	**5**
Hylastinus obscurus	0	0	0	0	2	0	2	**2**
Pityogenes chalcographus	0	1	1	2	0	0	0	**2**
Pityokteines curvidens	1	0	0	0	0	0	0	**1**
Pityophthorus pityographus	22	1	0	1	0	0	0	**23**
Polygraphus poligraphus	1	0	0	0	0	0	0	**1**
Scolytus laevis	2	0	0	0	0	0	0	**2**
Scolytus scolytus	1	0	0	0	0	0	0	**1**
Taphrorychus bicolor	1	0	0	0	0	0	0	**1**
Trypodendron lineatum	2	0	1	1	0	0	0	**3**
Xyleborus dispar	2	3	6	9	0	0	0	**11**
Xyleborus saxeseni	33	49	27	76	0	0	0	**109**
								195

CERAMBYCIDAE	Suspendu	Bostryches I	Bostryches II	Bostryches I + II	Malaise I	Malaise II	Malaise I + II	**TOTAL**
Clytus arietis	0	0	1	1	2	0	2	**3**
Corymbia rubra	0	0	0	0	1	1	2	**2**
Leptura aurulenta	0	0	1	1	0	0	0	**1**
Pogonocherus hispidulus	0	0	0	0	0	1	1	**1**
Rhagium mordax	0	0	0	0	4	2	6	**6**
Sinodendron cylindricum	0	1	0	1	0	0	0	**1**
Stenurella melanura	0	0	0	0	1	1	2	**2**
Tetropium castaneum	0	0	0	0	1	0	1	**1**
								17

LUCANIDAE	Suspendu	Bostryches I	Bostryches II	Bostryches I + II	Malaise I	Malaise II	Malaise I + II	**TOTAL**
Platycerus caprea	0	1	0	1	0	1	1	**2**
								2

1999 : Les Soupiats

SCOLYTIDAE	Suspendu	Bostryches I	Bostryches II	Bostryches I + II	Malaise I	Malaise II	Malaise I + II	**TOTAL**
Cryphalus abietis	2	0	0	0	0	0	0	**2**
Cryphalus piceae	0	0	1	1	0	0	0	**1**
Crypturgus cinereus	1	0	0	0	0	0	0	**1**
Crypturgus hispidulus	5	0	9	9	0	0	0	**14**
Crypturgus pusillus	0	0	1	1	0	0	0	**1**
Dryocoetes autographus	1	1	11	12	0	0	0	**13**
Dryocoetes hectographus	0	0	6	6	1	0	1	**7**
Ernoporus fagi	3	0	0	0	0	0	0	**3**
Hylastes cunicularius	1	9	64	73	1	4	5	**79**
Hylastinus obscurus	0	0	0	0	0	1	1	**1**
Hylurgops palliatus	0	21	17	38	0	4	4	**42**
Ips typographus	1	0	3	3	0	6	6	**10**
Phthorophloeus spinulosus	2	0	1	1	0	0	0	**3**
Pityogenes chalcographus	10	1	7	8	1	1	2	**20**
Pityophthorus pityographus	5	0	2	2	0	0	0	**7**
Trypodendron lineatum	21	23	93	116	0	1	1	**138**
Xyleborus saxeseni	0	0	1	1	0	0	0	**1**
								343

CERAMBYCIDAE	Suspendu	Bostryches I	Bostryches II	Bostryches I + II	Malaise I	Malaise II	Malaise I + II	**TOTAL**
Alosterna tabacicolor	0	0	0	0	1	0	1	**1**
Anastrangalia sanguinolenta	0	0	3	3	0	0	0	**3**
Clytus arietis	0	0	0	0	0	1	1	**1**
Corymbia rubra	0	0	1	1	0	0	0	**1**
Gaurotes virginea	0	0	0	0	0	1	1	**1**
Molorchus minor	0	0	1	1	0	0	0	**1**
Oxymirus cursor	0	0	3	3	0	0	0	**3**
Pogonocherus fasciculatus	0	0	0	0	0	2	2	**2**
Rhagium inquisitor	0	0	0	0	1	2	3	**3**
Tetropium castaneum	1	0	0	0	0	0	0	**1**
								17

GŒLDLIN *et al.* 2003. Les insectes indicateurs.
ANNEXE 4.12

1999 : Chalet du Mont-Tendre

SCOLYTIDAE	Suspendu	Bostryches I	Bostryches II	Bostryches I + II	Malaise I	Malaise II	Malaise I + II	**TOTAL**
Cryphalus abietis	0	0	1	1	2	2	4	**5**
Crypturgus cinereus	1	0	8	8	0	0	0	**9**
Crypturgus pusillus	0	0	1	1	0	0	0	**1**
Dryocoetes autographus	0	16	8	24	0	0	0	**24**
Dryocoetes hectographus	1	1	0	1	0	0	0	**2**
Hylastes cunicularius	10	40	96	136	22	14	36	**182**
Hylurgops palliatus	0	7	3	10	2	0	2	**12**
Ips typographus	1	1	0	1	0	0	0	**2**
Phthorophloeus spinulosus	13	1	3	4	0	0	0	**17**
Pityophthorus pityographus	9	2	17	19	0	0	0	**28**
Polygraphus poligraphus	5	0	11	11	0	0	0	**16**
Trypodendron lineatum	1	2	14	16	2	0	2	**19**
								317

CERAMBYCIDAE	Suspendu	Bostryches I	Bostryches II	Bostryches I + II	Malaise I	Malaise II	Malaise I + II	**TOTAL**
Molorchus minor	2	0	0	0	0	0	0	**2**
Oxymirus cursor	0	0	1	1	0	0	0	**1**
Pogonocherus fasciculatus	0	0	0	0	0	1	1	**1**
Rhagium bifasciatum	0	0	1	1	1	0	1	**2**
Rhagium inquisitor	0	0	1	1	0	0	0	**1**
Tetropium castaneum	0	0	1	1	0	0	0	**1**
								8

ANNEXE 5

Abondance des espèces de Syrphidae échantillonnées par pièges Malaise lors de l'étude du site de Montricher. Les abondances par espèces sont des moyennes du nombre d'individus capturés dans deux pièges Malaise au cours d'une semaine de capture. Les espèces et les sites ont été ordonnés en fonction de leur position le long du premier axe (F1) de l'analyse factorielle des correspondances appliquée au tableau de données. Le tableau a été fractionné en trois parties pour des raisons de lisibilité. Les cortèges spécifiques propres à chaque station ont été entourés d'un trait gras. Les espèces contribuant le plus à la distinction des deux groupes de stations issus de la classification (groupes 1 et 2, figure 5) sont indiquées en grisé.

GŒLDLIN *et al.* 2003. Les insectes indicateurs.
ANNEXE 5.1

	LDE98	LMO98	PES98	LDA98	LMO99	CVE99	LMO97	LSO99	RBL97	RBL98	CMO99	RBL99	FREQUENCE	ABONDANCE
altitude (m)	800-900	800-900	800-900	<800	800-900	1100-1200	800-900	1400-1500	1300-1400	1300-1400	>1500	1300-1400	(dans 179 semaines	(nb. d'individus)
groupe dans la classification	1	1	2	1	1	1	1	2	2	2	2	2	de piégeage)	
Cheilosia chloris		0.05											0.006	1
Cheilosia psilophthalma		0.09											0.011	2
Chrysogaster virescens		0.05											0.006	1
Criorhina ranunculi		0.05											0.006	1
Dasysyrphus hilaris		0.09											0.011	2
Didea fasciata		0.05											0.006	1
Meligramma triangulifera		0.05											0.006	1
Orthonevra nobilis		0.09											0.011	2
Pipiza luteitarsis /s.Verlin.		0.05											0.006	1
Sphegina spheginea		0.05											0.006	1
Spilomyia manicata		0.05											0.006	1
Trichopsomyia joratensis		0.05											0.006	1
Dasysyrphus venustus/s.Laska	0.09	0.55	0.18										0.039	15
Parasyrphus malinellus		0.14	0.18										0.022	5
Cheilosia aerea		0.05	0.09										0.011	2
Cheilosia impressa		0.05	0.09										0.011	2
Cheilosia albipila			0.09										0.006	1
Cheilosia lenis			0.09										0.006	1
Chrysotoxum arcuatum			0.09										0.006	1
Epistrophe diaphana			0.09										0.006	1
Neoascia tenur			0.18										0.011	2
Paragus romanicus			0.18										0.006	2
Syrphus nitidifrons		0.68					0.06						0.017	16
Platycheirus immaculatus	0.36	1.86	0.36	0.20	0.10					0.06			0.061	54
Sphaerophoria bankowskae			0.36	0.10									0.017	5
Sphaerophoria taeniata		0.05	5.55	0.90					0.11	0.06			0.061	74
Rhingia borealis		0.09			0.05								0.011	3
Xanthogramma pedissequum			0.27	0.10	0.05								0.022	5
Xanthogramma lactum		0.05	0.27		0.14								0.034	7
Epistrophe melanostoma			0.09	0.10									0.011	2
Sphegina montana		0.05			0.05								0.011	2
Paragus majoranae			0.73	0.70						0.06			0.067	16
Epistrophella euchroma		0.14	0.27	0.20		0.10	0.06						0.039	10
Cheilosia soror		0.05	0.09	0.10		0.10							0.022	4
Meligramma cingulata	0.27	3.45	0.45			0.20	0.06			0.11		0.26	0.061	94
Neoascia podagrica	0.09	0.27	0.18	0.40			0.11		0.05				0.067	16
Brachyopa scutellaris				0.10									0.006	1
Cheilosia vulpina				0.10									0.006	1
Ferdinandea cuprea				0.10									0.006	1
Sphegina latifrons		0.09					0.06						0.017	3
Temnostoma bombylans	0.09	0.14	0.27	0.10	0.14							0.05	0.056	12
Platycheirus tarsalis	0.18	0.09	0.64				0.06	0.10	0.05	0.06			0.073	15
Pipizella viduata		0.14	0.73	0.10					0.11	0.11			0.061	16
Cheilosia flavipes			0.55					0.10	0.05				0.017	8
Meligramma cincta	1.09	1.09	2.00	0.80	0.57	0.60	0.94		0.32	0.22		0.21	0.307	115
Arctophila superbiens					0.05								0.006	1
Caliprobola speciosa					0.10								0.011	2
Cheilosia semifasciata					0.05								0.006	1
Microdon miki					0.05								0.006	1
Rhingia rostrata					0.05								0.006	1
Temnostoma apiforme					0.05								0.006	1
Platycheirus europaeus	**0.36**	**7.32**	7.91	**2.90**	**5.95**	**3.30**	**9.33**	0.60	1.26	0.39	0.10	0.58	0.324	656
Eupeodes latifasciatus		0.09	0.64	0.30					0.16	0.17			0.089	18
Chrysotomum intermedium	0.82	0.45	0.91	1.20		0.90	0.28	0.10	0.05	0.50	0.10	0.11	0.251	69
Eumerus flavitarsis		0.05			0.05	0.40	0.06						0.039	7
Epistrophe nitidicollis		0.05	0.82	0.10						0.11		0.11	0.056	15
Eupeodes lapponicus	0.73	0.77	0.27	0.30	0.05		0.33		0.11	0.44	0.10	0.05	0.134	50
Cheilosia chrysocoma						0.10							0.006	1
Eumerus tarsalis						0.30							0.017	3
Cheilosia nigripes		0.05	0.09		0.05	0.10	0.06		0.05				0.034	6
Dasysyrphus albostriatus	0.27	0.50	0.18	0.10			0.06		0.05	0.17	0.10	0.05	0.067	24

GŒLDLIN *et al.* 2003. Les insectes indicateurs.
ANNEXE 5.2

	LDE98	LMO98	PES98	LDA98	LMO99	CVE99	LMO97	LSO99	RBL97	RBL98	CMO99	RBL99	FREQUENCE	ABONDANCE
altitude (m)	800-900	800-900	800-900	<800	800-900	1100-1200	800-900	1400-1500	1300-1400	1300-1400	>1500	1300-1400	(dans 179 semaines	(nb. d'individus)
groupe dans la classification	1	1	2	1	1	1	1	2	2	2	2	2	de piégeage)	
Cheilosia chloris		0.05											0.006	1
Cheilosia psilophthalma		0.09											0.011	2
Chrysogaster virescens		0.05											0.006	1
Criorhina ranunculi		0.05											0.006	1
Dasysyrphus hilaris		0.09											0.011	2
Didea fasciata		0.05											0.006	1
Meligramma triangulifera		0.05											0.006	1
Orthonevra nobilis		0.09											0.011	2
Pipiza luteitarsis /s.Verlin.		0.05											0.006	1
Sphegina spheginea		0.05											0.006	1
Spilomyia manicata		0.05											0.006	1
Trichopsomyia joratensis		0.05											0.006	1
Dasysyrphus venustus/s.Laska	0.09	0.55	0.18										0.039	15
Parasyrphus malinellus		0.14	0.18										0.022	5
Cheilosia aerea		0.05	0.09										0.011	2
Cheilosia impressa		0.05	0.09										0.011	2
Cheilosia albipila			0.09										0.006	1
Cheilosia lenis			0.09										0.006	1
Chrysotoxum arcuatum			0.09										0.006	1
Epistrophe diaphana			0.09										0.006	1
Neoascia tenur			0.18										0.011	2
Paragus romanicus			0.18										0.006	2
Syrphus nitidifrons		0.68					0.06						0.017	16
Platycheirus immaculatus	0.36	1.86	0.36	0.20	0.10					0.06			0.061	54
Sphaerophoria bankowskae			0.36	0.10									0.017	5
Sphaerophoria taeniata		0.05	5.55	0.90					0.11	0.06			0.061	74
Rhingia borealis		0.09			0.05								0.011	3
Xanthogramma pedissequum			0.27	0.10	0.05								0.022	5
Xanthogramma laetum		0.05	0.27		0.14								0.034	7
Epistrophe melanostoma			0.09	0.10									0.011	2
Sphegina montana		0.05			0.05								0.011	2
Paragus majoranae			0.73	0.70						0.06			0.067	16
Epistrophella euchroma		0.14	0.27	0.20		0.10	0.06						0.039	10
Cheilosia soror		0.05	0.09	0.10		0.10							0.022	4
Meligramma cingulata	0.27	3.45	0.45			0.20	0.06			0.11		0.26	0.061	94
Neoascia podagrica	0.09	0.27	0.18	0.40			0.11		0.05				0.067	16
Brachyopa scutellaris				0.10									0.006	1
Cheilosia vulpina				0.10									0.006	1
Ferdinandea cuprea				0.10									0.006	1
Sphegina latifrons		0.09					0.06						0.017	3
Temnostoma bombylans	0.09	0.14	0.27	0.10	0.14							0.05	0.056	12
Platycheirus tarsalis	0.18	0.09	0.64				0.06	0.10	0.05	0.06			0.073	15
Pipizella viduata		0.14	0.73	0.10					0.11	0.11			0.061	16
Cheilosia flavipes			0.55					0.10	0.05				0.017	8
Meligramma cincta	1.09	1.09	2.00	0.80	0.57	0.60	0.94		0.32	0.22		0.21	0.307	115
Arctophila superbiens					0.05								0.006	1
Caliprobola speciosa					0.10								0.011	2
Cheilosia semifasciata					0.05								0.006	1
Microdon miki					0.05								0.006	1
Rhingia rostrata					0.05								0.006	1
Temnostoma apiforme					0.05								0.006	1
Platycheirus europaeus	**0.36**	**7.32**	7.91	**2.90**	**5.95**	**3.30**	**9.33**	0.60	1.26	0.39	0.10	0.58	0.324	656
Eupeodes latifasciatus		0.09	0.64	0.30					0.16	0.17			0.089	18
Chrysotomum intermedium	0.82	0.45	0.91	1.20		0.90	0.28	0.10	0.05	0.50	0.10	0.11	0.251	69
Eumerus flavitarsis		0.05			0.05	0.40	0.06						0.039	7
Epistrophe nitidicollis		0.05	0.82	0.10						0.11		0.11	0.056	15
Eupeodes lapponicus	0.73	0.77	0.27	0.30	0.05		0.33		0.11	0.44	0.10	0.05	0.134	50
Cheilosia chrysocoma						0.10							0.006	1
Eumerus tarsalis						0.30							0.017	3
Cheilosia nigripes		0.05	0.09		0.05	0.10	0.06		0.05				0.034	6
Dasysyrphus albostriatus	0.27	0.50	0.18	0.10			0.06		0.05	0.17	0.10	0.05	0.067	24

GŒLDLIN *et al.* 2003. Les insectes indicateurs.
ANNEXE 5.3

	LDF98	LMO98	PES98	LDA98	LMO99	CVE99	LMO97	LSO99	RBL97	RBL98	CMO99	RBL99	FREQUENCE	ABONDANCE
altitude (m)	800-900	800-900	800-900	<800	800-900	1100-1200	800-900	1400-1500	1300-1400	1300-1400	>1500	1300-1400	(dans 179 semaines	(nb. d'individus)
groupe dans la classification	1	1	2	1	1	1	1	2	2	2	2	2	de piégeage)	
Epistrophe eligans			0.27		0.05	0.10						0.05	0.028	6
Parasyrphus punctulatus	3.09	8.14	0.55	0.40	3.14	1.20		1.30			0.80	1.95	0.179	256
Paragus haemorrhous		0.05	1.36	0.10						0.72			0.073	30
Platycheirus angustatus		0.05		0.20		0.10			0.11				0.034	6
Chalsosyrphus nemorum					0.05		0.06						0.011	2
Heringia pubescens	0.09	0.91	0.09			0.10						0.26	0.056	28
Melangyna umbellatarum			0.09						0.05				0.011	2
Temnostoma vespiforme		0.05	0.09		0.10		0.28			0.06			0.050	10
Brachypalpoides lentus		0.14	0.18	0.20	0.14	0.10	0.44		0.05	0.06		0.05	0.084	22
Rhingia campestris	0.27	2.14	4.45	0.40	1.57	0.30	2.28	1.20	0.47	1.83	0.40	0.37	0.346	245
Cheilosia pagana	0.09	0.41	0.36	0.10	0.29	0.10	0.11	0.30		0.22		0.11	0.134	33
Xylota xanthocnema		0.09					0.17			0.06			0.028	6
Parasyrphus macularis		0.05	0.09	0.10	0.05		0.11			0.17			0.039	9
Meliscaeva cinctella	1.82	2.18	0.55	0.40	2.43	0.20	4.78	0.30	1.21	0.61	0.20	1.16	0.425	278
Chrysotoxum bicinctum		0.09	0.18	0.30	0.19	0.20			0.05	0.11	0.10	0.11	0.095	19
Criorhina asilica		0.05		0.10	0.10							0.05	0.028	5
Eriozona syrphoides							0.17						0.011	3
Leucozona laternaria							0.17						0.011	3
Merodon equetris							0.06						0.006	1
Platycheirus peltatus		0.45	0.27	0.20	0.29		0.28		0.05	0.33		0.21	0.117	37
Heringia vitripennis		0.05	0.09		0.05				0.05	0.11			0.034	6
Baccha elongata	0.09	0.82	0.18	0.60	0.29		1.83		0.21	1.11		0.21	0.263	94
Eristalis jugorum		0.09			0.05		0.56			0.06		0.05	0.061	15
Leucozona glaucia							0.39			0.06			0.017	8
Xylota segnis	0.27	2.23	1.00	0.60	1.14	0.90	1.17	0.80	0.95	1.22	0.10	1.05	0.486	192
Cheilosia variabilis		0.09	0.09							0.06		0.05	0.028	5
Platycheirus clypeatus		0.09	0.18			0.10	0.06		0.32	0.11			0.061	14
Platycheirus scutatus	0.18	0.23	1.09	0.50	0.10		0.39		0.42	1.28	0.20	0.21	0.240	70
Sphaerophoria virgata				0.10					0.05	0.06			0.017	3
Myathropa florea	0.09	0.09	0.18	0.10	0.10		0.28	0.10	0.11	0.11		0.16	0.112	21
Melanostoma mellinum	0.18	4.50	8.64	1.00	0.95	2.00	0.72	3.60	1.53	4.39	2.50	3.63	0.497	497
Eristalis interrupta							0.44		0.11	0.06			0.028	11
Eupeodes nitens	0.18	0.14	0.27	0.40	0.05	0.50	0.06	0.10	0.26	0.33	0.40	0.26	0.179	40
Melangyna compositarum		0.05					0.06			0.11			0.022	4
Chriorhina berberina	0.09	1.36	0.73	0.20	0.33	0.30		0.10	0.32	0.39		1.11	0.196	86
Chrysotoxum fasciatum	0.18	0.14	0.18	0.20	0.24	0.30	0.17	0.10	0.47	0.22	0.30	0.26	0.184	42
Brachypalpus laphriformis	0.09			0.10		0.50		0.20		0.39		0.11	0.050	18
Dasysyrphus pinastri	0.09	0.45					0.06		0.47	0.39	0.20	0.05	0.112	31
Cheilosia albitarsis	0.09	0.55	0.27		0.05			0.20	0.32	0.28	0.10	0.32	0.106	37
Xylota sylvarum	0.09	0.23	0.09	0.20	0.24	0.20	0.39	0.10	0.11	0.39	0.10	0.37	0.190	41
Cheilosia impudens		0.50	0.18		0.05			0.60		0.22	0.10	0.21	0.073	29
Platycheirus parmatus		0.05	0.18			0.10			0.05	0.17		0.11	0.050	10
Epistrophe grossulariae	0.09	0.05					0.61		0.26	0.33		0.05	0.073	25
Episyrphus balteatus	4.18	12.77	5.09	7.40	9.67	7.90	26.56	4.40	28.63	29.00	2.70	12.37	0.637	2589
Blera fallax		0.09	0.45	0.10	0.05		0.06	0.80	0.21	0.67	0.10	0.05	0.128	36
Psilota anthracina							0.06			0.06			0.011	2
Syrphus ribesii		0.18	0.27	0.20	0.10		1.17	0.40	1.26	1.06		0.21	0.218	83
Syritta pipiens				0.10					0.05	0.22			0.028	6
Sphegina clunipes	0.09	2.45	0.36	0.20	0.57		1.78	0.10	0.63	5.72	0.10	1.63	0.374	253
Platycheirus splendidus					0.05	0.10		0.10				0.05	0.022	4
Parasyrphus lineolus			0.09				0.11		0.11	0.28	0.10		0.056	11
Cheilosia mutabilis			0.09	0.10		0.20	0.06	0.70	0.11	0.44		0.05	0.084	23
Meliscaeva auricollis	0.09	0.32	0.64	0.40	0.19	0.60	1.06	0.50	4.11	2.17	0.10	0.53	0.341	181
Melanostoma scalare	0.45	2.77	1.55	1.20	2.10	1.40	2.94	3.00	5.89	5.33	1.00	4.68	0.615	543
Cheilosia vernalis		0.05						0.10		0.22			0.028	6
Cheilosia bergenstammi			0.09							0.11		0.05	0.022	4
Sphaerophoria interrupta	0.09		0.64	0.20					5.58	0.56	0.10		0.095	127
Chrysotoxum fasciolatum		0.05	0.09		0.10	0.10	0.06		0.05	0.17	0.20	0.16	0.078	15

GŒLDLIN *et al.* 2003. Les insectes indicateurs.
ANNEXE 5.4

	LDE98	LMO98	PES98	LDA98	LMO99	CVE99	LMO97	LSO99	RBL97	RBL98	CMO99	RBL99	FREQUENCE	ABONDANCE
altitude (m)	800-900	800-900	800-900	<800	800-900	1100-1200	800-900	1400-1500	1300-1400	1300-1400	>1500	1300-1400	(dans 179 semaines	(nb. d'individus)
groupe dans la classification	1	1	2	1	1	1	1	2	2	2	2	2	de piégeage)	
Cheilosia barbata		0.09	0.09		0.10	0.20		0.60	0.16	0.33		0.21	0.112	26
Syrphus torvus	0.09	0.18	0.18				2.06		9.58	0.72	0.10		0.212	240
Eupeodes luniger		0.05	0.18	0.30	0.05		0.11	0.30	0.63	0.44	0.20	0.26	0.134	39
Microdon analis				0.10						0.11		0.05	0.017	4
Scaeva pyrastri			0.27	0.10	0.05	0.10		0.30	0.74	0.17	0.50	0.16	0.134	34
Chrysotoxum elegans		0.05					0.06		0.05			0.05	0.022	4
Cheilosia fraterna		0.09			0.05							0.11	0.017	5
Volucella pellucens	0.09	0.05		0.10	0.19		0.44	0.10	0.11	0.50		0.42	0.128	35
Brachyopa vittata		0.05							0.16	0.11	0.10		0.028	7
Platycheirus manicatus		0.05				0.10		0.30		0.22	0.10	0.05	0.050	11
Parasyrphus annulatus		0.09					0.06	0.10		0.72		0.05	0.050	18
Merodon aeneus								0.10					0.006	1
Volucella bombylans								0.10	0.05				0.011	2
Xylota coeruleiventris		0.09			0.05	0.20	0.33	0.50	2.05	4.00		0.32	0.218	133
Cheilosia pubera									0.16				0.011	3
Chrysotoxum vernale									0.05				0.006	1
Eriozona erratica									0.05				0.006	1
Eupeodes bucculatus									0.16				0.017	3
Paragus absidatus									0.16				0.011	3
Volucella inanis									0.05	0.06			0.011	2
Platycheirus albimanus	0.45	1.27	**1.55**	1.10	0.86	0.60	1.28	**8.50**	**10.47**	**20.83**	**1.80**	**6.26**	0.547	904
Dasysyrphus venustus/s.Doczkal		0.05						0.10				0.05	0.017	3
Cheilosia canicularis								0.10	0.37	0.06	0.10		0.039	10
Cheilosia lasiopa										0.06			0.006	1
Cheilosia vicina										0.11			0.011	2
Eristalis picea										0.06			0.006	1
Platycheirus abbruzensis										0.11			0.011	2
Xylota florum										0.06			0.006	1
Eupeodes corollae	0.27	0.32	**1.00**	0.60	0.14	1.40	0.11	**1.70**	**3.47**	**4.72**	**5.50**	**3.16**	0.318	329
Merodon cinereus									0.32	0.22	0.20		0.050	12
Eristalis tenax		0.05				0.20	0.28	0.20	0.37	0.83	0.70	0.42	0.151	47
Xanthandrus comtus		0.05			0.05			0.10		0.06	0.10	0.11	0.039	7
Sphaerophoria fatarum								0.10	0.11		0.40		0.028	7
Cheilosia antiqua		0.14			0.10			0.20	0.21	0.28	0.20	0.32	0.101	24
Cheilosia faucis								0.60	0.05	0.11	0.20	0.11	0.050	13
Scaeva selenetica							0.06	0.80	0.95	0.83	3.80	0.26	0.134	85
Cheilosia urbana										0.06	0.30		0.017	4
Sphaerophoria scripta		0.14	**7.00**	1.90	0.19	1.10	0.17	**5.30**	**5.95**	**13.39**	**4.40**	**15.53**	0.374	863
Paragus punctulatus											0.10		0.006	1
Platycheirus melanopsis											0.20		0.011	2
Helophilus pendulus		0.09	0.09	0.10	1.33	0.60	0.78	2.40	0.89	0.67	0.30	3.47	0.263	174
Dasysyrphus tricinctus		0.05					0.06		0.05			0.11	0.028	5
Eristalis arbustorum								0.20	0.05		0.20	0.05	0.022	6
Brachyopa testacea						0.10		0.10	0.32	0.39	0.20	0.26	0.084	22
Syrphus vitripennis		0.09	0.18		0.10	0.30	0.33	0.70	0.53	0.17	1.30	1.53	0.173	77
Cheilosia derasa								0.60	0.32	0.50	0.10	0.37	0.106	29
Melangyna lasiophthalma	0.09	0.09		0.10	0.38			0.10			0.20	0.89	0.073	32
Parasyrphus vittiger			0.09			0.10	0.06	0.20	0.11	0.06	0.30	0.42	0.095	19
Sphaerophoria infuscata			0.09					0.80	0.26	0.72		0.63	0.106	39
Cheilosia rhyncops		0.23				0.10		0.80	0.53	1.11	0.60	1.26	0.134	74
Cheilosia melanura								0.10		0.06		0.05	0.017	3
Arctophila bombiformis					0.05		0.11	0.50	0.42	0.17	0.70	0.63	0.151	38
Cheilosia frontalis					0.14			0.10		0.22	0.10	0.32	0.056	15
Eupeodes nielseni									0.05		0.20	0.05	0.017	4
Cheilosia personata									0.05	0.22		0.11	0.039	7
Pipiza quadrimaculata		0.05	0.09		0.10			0.40	0.11	0.39	0.10	0.79	0.084	33
Helophilus trivittatus					0.10		0.06	0.60	0.32	0.17	0.10	0.74	0.089	33
Platycheirus nielseni							0.06			0.22		0.16	0.028	8
Leucozona lucorum										0.11		0.05	0.017	3
Brachyopa panzeri									0.05	0.06		0.05	0.017	3
Dasysyrphus friuliensis									0.05	0.06		0.05	0.017	3
Cheilosia proxima			0.09							0.06		0.21	0.022	6
Eristalis similis					0.10		1.17	**0.20**	**6.32**	**7.28**	**1.50**	**15.68**	0.162	589
Eristalis pertinax		0.59	**0.18**		0.86		5.39	**0.70**	**7.32**	**8.00**	**0.80**	**82.26**	0.302	1991
Brachyopa dorsata												0.32	0.022	6
Sericomyia silentis												0.05	0.006	1
RICHESSE SPECIFIQUE	39	104	86	61	70	47	70	63	90	107	59	90		
nb. de semaines de capture	11	22	11	10	21	10	18	10	19	18	10	19		

GŒLDLIN *et al.* 2003. Les insectes indicateurs.
ANNEXE 6.1

Annexe 6 : Catalogue des syrphides répertoriés du Jura suisse

M = espèces répertoriées des forêts de Montricher (sans mention d'année = insectes capturés en chasse à vue, au filet entomologique)
97 = espèces répertoriées des forêts de Montricher en 1997
98 = espèces répertoriées des forêts de Montricher en 1998
99 = espèces répertoriées des forêts de Montricher en 1999
saproxylic = espèces saproxylophages
saproxylic* = espèces saproxylophages non répertoriées de Montricher et associées à de vieux arbres vivants

Anasimyia lineata (Fabricius), 1787					
Arctophila bombiformis (Fallen), 1810	**M**	97	98	99	
Arctophila superbiens (Muller), 1776	**M**			99	
Baccha elongata (Fabricius), 1775	**M**	97	98	99	
Blera fallax (Linnaeus), 1758	**M**	97	98	99	saproxylic
Brachyopa bicolor (Fallen), 1817					saproxylic*
Brachyopa dorsata Zetterstedt, 1837	**M**			99	saproxylic
Brachyopa insensilis Collin, 1939					saproxylic*
Brachyopa panzeri Goffe, 1945	**M**	97	98	99	saproxylic
Brachyopa scutellaris Robineau-Desvoidy, 1843	**M**		98		saproxylic
Brachyopa testacea (Fallen), 1871	**M**	97	98	99	saproxylic
Brachyopa vittata Zetterstedt, 1843	**M**	97	98	99	saproxylic
Brachypalpoides lentus (Meigen), 1822	**M**	97	98	99	saproxylic
Brachypalpus chrysites Egger, 1859	**M**				saproxylic
Brachypalpus laphriformis (Fallen), 1816	**M**		98	99	saproxylic
Caliprobola speciosa (Rossi), 1790	**M**			99	saproxylic
Callicera aenea (Fabricius), 1777	**M**				saproxylic
Callicera aurata (Rossi), 1790					saproxylic*
Chalcosyrphus nemorum (Fabricius), 1805	**M**	97		99	saproxylic
Cheilosia aerea Dufour, 1848	**M**		98		
Cheilosia ahenea (von Roser), 1840					
Cheilosia albipila Meigen, 1838	**M**		98		
Cheilosia albitarsis (Meigen), 1822	**M**	97	98	99	
Cheilosia antiqua (Meigen), 1822	**M**	97	98	99	
Cheilosia barbata Loew, 1857	**M**	97	98	99	
Cheilosia bergenstammi Becker, 1894	**M**		98	99	
Cheilosia caerulescens (Meigen), 1822					
Cheilosia canicularis (Panzer), 1801	**M**	97	98	99	
Cheilosia carbonaria Egger, 1860					
Cheilosia chloris (Meigen), 1822	**M**		98		
Cheilosia chrysocoma (Meigen), 1822	**M**			99	
Cheilosia cynocephala Loew, 1840					
Cheilosia derasa Loew, 1857	**M**	97	98	99	
Cheilosia faucis Becker, 1894	**M**	97	98	99	
Cheilosia flavipes (Panzer), 1798	**M**	97	98	99	
Cheilosia fraterna (Meigen), 1830	**M**		98	99	
Cheilosia frontalis Loew, 1857	**M**		98	99	
Cheilosia gagatea Loew, 1857					
Cheilosia illustrata (Harris), 1780	**M**				
Cheilosia impressa Loew, 1840	**M**		98		
Cheilosia impudens Becker, 1894	**M**		98	99	
Cheilosia insignis Loew, 1857					
Cheilosia lasiopa Kowarz, 1885	**M**		98		
Cheilosia lenis Becker, 1894	**M**		98		

GŒLDLIN *et al.* 2003. Les insectes indicateurs.
ANNEXE 6.2

Cheilosia melanopa (Zetterstedt), 1843					
Cheilosia melanura Becker, 1894	**M**		98	99	
Cheilosia montana Egger, 1860					
Cheilosia morio (Zetterstedt), 1838	**M**				saproxylic
Cheilosia mutabilis (Fallen), 1817	**M**	97	98	99	
Cheilosia nebulosa (Verrall), 1871					
Cheilosia nigripes (Meigen), 1822	**M**	97	98	99	
Cheilosia pagana (Meigen), 1822	**M**	97	98	99	
Cheilosia pedemontana Rondani, 1857					
Cheilosia personata Loew, 1857	**M**	97	98	99	
Cheilosia pictipennis Egger, 1860					
Cheilosia proxima (Zetterstedt), 1843	**M**		98	99	
Cheilosia psilophthalma Becker, 1894	**M**		98		
Cheilosia pubera (Zetterstedt), 1838	**M**	97			
Cheilosia rhynchops Egger, 1860	**M**	97	98	99	
Cheilosia sahlbergi Becker, 1894					
Cheilosia semifasciata Becker, 1894	**M**			99	
Cheilosia sootryeni Nielsen, 1970					
Cheilosia soror (Zetterstedt), 1843	**M**		98		
Cheilosia subpictipennis Claussen, 1998	**M**				
Cheilosia urbana (Meigen), 1822	**M**		98	99	
Cheilosia vangaveri Timon-David, 1937					
Cheilosia variabilis (Panzer), 1798	**M**	97	98	99	
Cheilosia vernalis (Fallen), 1817	**M**		98		
Cheilosia vicina (Zetterstedt), 1849	**M**		98		
Cheilosia vulpina (Meigen), 1822	**M**		98		
Chrysogaster basalis Loew, 1857					
Chrysogaster solstitialis (Fallen), 1817	**M**				
Chrysogaster virescens Loew, 1854	**M**		98		
Chrysotoxum arcuatum (L.), 1758	**M**		98		
Chrysotoxum bicinctum (L.), 1758	**M**	97	98	99	
Chrysotoxum elegans Loew, 1841	**M**	97	98	99	
Chrysotoxum fasciatum (Muller), 1764	**M**	97	98	99	
Chrysotoxum fasciolatum (de Geer), 1776	**M**	97	98	99	
Chrysotoxum intermedium Meigen, 1822 (s. auct.)	**M**	97	98	99	
Chrysotoxum octomaculatum Curtis, 1837					
Chrysotoxum vernale Loew, 1841	**M**	97			
Criorhina asilica (Fallen), 1817	**M**		98	99	saproxylic
Criorhina berberina (Fabricius), 1805	**M**	97	98	99	saproxylic
Criorhina ranunculi (Panzer), 1804	**M**		98		saproxylic
Dasysyrphus albostriatus (Fallen), 1817	**M**	97	98	99	
Dasysyrphus friuliensis (van der Goot), 1960	**M**	97	98	99	
Dasysyrphus hilaris (Zetterstedt), 1843	**M**		98		
Dasysyrphus pinastri (DeGeer), 1776 sensu Doczkal, 1996	**M**	97	98	99	
Dasysyrphus tricinctus (Fallen), 1817	**M**	97	98	99	
Dasysyrphus venustus (Meigen), 1822 sensu Doczkal	**M**		98	99	
Dasysyrphus venustus (Meigen), 1922 sensu Laska	**M**		98		
Didea alneti (Fallen), 1817					
Didea fasciata Macquart, 1834	**M**		98		
Didea intermedia Loew, 1854					
Epistrophe diaphana (Zetterstedt), 1843	**M**		98		
Epistrophe eligans (Harris), 1780	**M**		98	99	
Epistrophe grossulariae (Meigen), 1822	**M**	97	98	99	
Epistrophe melanostoma (Zetterstedt), 1843	**M**		98		

GŒLDLIN *et al.* 2003. Les insectes indicateurs.
ANNEXE 6.3

Epistrophe nitidicollis (Meigen), 1822	**M**		98	99	
Epistrophella euchroma (Kowarz), 1885	**M**	97	98	99	
Episyrphus balteatus (DeGeer), 1776	**M**	97	98	99	
Eriozona erratica (L.), 1758	**M**	97			
Eriozona syrphoides (Fallen), 1817	**M**	97			
Eristalinus sepulchralis (L.), 1758					
Eristalis alpina (Panzer), 1798					
Eristalis arbustorum (L.), 1758	**M**	97		99	
Eristalis horticola (DeGeer), 1776					
Eristalis interrupta (Poda), 1761	**M**	97	98		
Eristalis intricaria (L.), 1758					
Eristalis jugorum Egger, 1858	**M**	97	98	99	
Eristalis pertinax (Scopoli), 1763	**M**	97	98	99	
Eristalis picea (Fallen), 1817	**M**		98		
Eristalis rupium Fabricius, 1805					
Eristalis similis (Fallen), 1817	**M**	97	98	99	saproxylic
Eristalis tenax (L.), 1758	**M**	97	98	99	
Eumerus flavitarsis Zetterstedt, 1843	**M**	97	98	99	
Eumerus ornatus Meigen, 1822					
Eumerus sabulonum (Fallen), 1817					
Eumerus tarsalis Loew, 1848	**M**			99	
Eupeodes bucculatus (Rondani), 1857	**M**	97			
Eupeodes corollae (Fabricius), 1794	**M**	97	98	99	
Eupeodes lapponicus (Zetterstedt), 1838	**M**	97	98	99	
Eupeodes latifasciatus (Macquart), 1829	**M**	97	98		
Eupeodes luniger (Meigen), 1822	**M**	97	98	99	
Eupeodes nielseni (Dusek & Laska), 1976	**M**	97		99	
Eupeodes nitens (Zetterstedt), 1843	**M**	97	98	99	
Ferdinandea cuprea (Scopoli), 1763	**M**		98		saproxylic
Helophilus pendulus (L.), 1758	**M**	97	98	99	
Helophilus trivittatus (Fabricius), 1805	**M**	97	98	99	
Heringia heringi (Zetterstedt), 1843					
Heringia latitarsis (Egger), 1865					
Heringia pubescens (Delucchi & Pschorn-Walcher), 1955	**M**		98	99	
Heringia vitripennis (Meigen), 1822	**M**	97	98	99	
Lejogaster metallina (Fabricius), 1781					
Lejota ruficornis (Zetterstedt), 1843					saproxylic
Leucozona glaucia (L.), 1758	**M**	97	98		
Leucozona laternaria (Muller), 1776	**M**	97			
Leucozona lucorum (L.), 1758	**M**		98	99	
Melangyna compositarum (Verrall), 1873	**M**	97	98		
Melangyna ericarum (Collin), 1946	**M**				
Melangyna lasiophthalma (Zetterstedt), 1843	**M**		98	99	
Melangyna umbellatarum (Fabricius), 1794	**M**	97	98		
Melanogaster aerosa (Loew), 1843					
Melanogaster hirtella (Loew), 1843					
Melanogaster nuda (Macquart), 1829					
Melanostoma mellinum (L.), 1758	**M**	97	98	99	
Melanostoma scalare (Fabricius), 1794	**M**	97	98	99	
Meligramma cincta (Fallen), 1817	**M**	97	98	99	
Meligramma cingulata (Egger), 1860	**M**	97	98	99	
Meligramma triangulifera (Zetterstedt), 1843	**M**		98		
Meliscaeva auricollis (Meigen), 1822	**M**	97	98	99	
Meliscaeva cinctella (Zetterstedt), 1843	**M**	97	98	99	

GŒLDLIN *et al.* 2003. Les insectes indicateurs.
ANNEXE 6.4

Merodon aeneus Meigen, 1822	**M**			99	
Merodon cinereus (Fabricius), 1794	**M**	97	98	99	
Merodon equestris (Fabricius), 1794	**M**	97			
Merodon ruficornis Meigen, 1822					
Merodon rufus Meigen, 1838					
Microdon analis (Macquart), 1842	**M**		98		
Microdon miki Doczkal & Schmid, 1999	**M**			99	
Myathropa florea (L.), 1758	**M**	97	98	99	
Myolepta vara (Panzer), 1798					saproxylic*
Neoascia annexa (Muller), 1776					
Neoascia meticulosa (Scopoli), 1763					
Neoascia obliqua Coe, 1940					
Neoascia podagrica (Fabricius), 1775	**M**	97	98		
Neoascia tenur (Harris), 1780	**M**		98		
Neoascia unifasciata (Strobl), 1898					
Orthonevra brevicornis Loew, 1843					
Orthonevra nobilis (Fallen), 1817	**M**		98		
Orthonevra onytes (Seguy), 1961					
Paragus absidatus Goeldlin, 1971	**M**	97			
Paragus haemorrhous Meigen, 1822	**M**		98		
Paragus majoranae Rondani, 1857	**M**		98		
Paragus punctulatus Zetterstedt, 1838	**M**			99	
Paragus romanicus Stanescu, 1992	**M**		98		
Paragus tibialis (Fallen), 1817	**M**				
Parasyrphus annulatus (Zetterstedt), 1838	**M**	97	98	99	
Parasyrphus lineolus (Zetterstedt), 1843	**M**	97	98	99	
Parasyrphus macularis (Zetterstedt), 1843	**M**	97	98	99	
Parasyrphus malinellus (Collin), 1952	**M**		98		
Parasyrphus punctulatus (Verrall), 1873	**M**		98	99	
Parasyrphus vittiger (Zetterstedt), 1843	**M**	97	98	99	
Parhelophilus consimilis (Malm), 1863					
Pipiza luteitarsis Zetterstedt, 1843	**M**		98		
Pipiza quadrimaculata (Panzer), 1804	**M**	97	98	99	
Pipizella divicoi (Goeldlin), 1974					
Pipizella maculipennis (Meigen), 1822					
Pipizella viduata (L.), 1758	**M**	97	98		
Platycheirus abruzzensis (van der Goot), 1969	**M**		98		
Platycheirus albimanus (Fabricius), 1781	**M**	97	98	99	
Platycheirus ambiguus (Fallen), 1817					
Platycheirus angustatus (Zetterstedt), 1843	**M**	97	98	99	
Platycheirus angustipes Goeldlin, 1974					
Platycheirus clypeatus (Meigen), 1822	**M**	97	98	99	
Platycheirus europaeus Goeldlin, Maibach & Speight, 1990	**M**	97	98	99	
Platycheirus granditarsus (Forster), 1771					
Platycheirus immaculatus Ohara, 1980	**M**		98	99	
Platycheirus jaerensis Nielsen, 1971					
Platycheirus manicatus (Meigen), 1822	**M**		98	99	
Platycheirus melanopsis Loew, 1856	**M**			99	
Platycheirus nielseni Vockeroth, 1990	**M**	97	98	99	
Platycheirus occultus Goeldlin, Maibach & Speight, 1990					
Platycheirus parmatus Rondani, 1857	**M**	97	98	99	
Platycheirus peltatus (Meigen), 1822	**M**	97	98	99	
Platycheirus perpallidus (Verrall), 1901					
Platycheirus podagratus (Zetterstedt), 1838					

GŒLDLIN *et al.* 2003. Les insectes indicateurs.
ANNEXE 6.5

Platycheirus rosarum (Fabricius), 1787					
Platycheirus scambus (Staeger), 1843					
Platycheirus scutatus (Meigen), 1822	**M**	97	98	99	
Platycheirus splendidus Rotheray, 1998	**M**			99	
Platycheirus tarsalis (Schummel), 1836	**M**	97	98	99	
Psilota anthracina Meigen, 1822	**M**	97			saproxylic
Rhingia borealis Ringdahl, 1928	**M**		98	99	
Rhingia campestris Meigen, 1822	**M**	97	98	99	
Rhingia rostrata (L.), 1758	**M**			99	
Scaeva pyrastri (L.), 1758	**M**	97	98	99	
Scaeva selenitica (Meigen), 1822	**M**	97	98	99	
Sericomyia lappona (L.), 1758					
Sericomyia silentis (Harris), 1776	**M**			99	
Sphaerophoria bankowskae Goeldlin, 1989	**M**		98		
Sphaerophoria fatarum Goeldlin, 1989	**M**	97		99	
Sphaerophoria infuscata Goeldlin, 1974	**M**	97	98	99	
Sphaerophoria interrupta (Fabricius), 1805	**M**	97	98	99	
Sphaerophoria philantha (Meigen), 1822					
Sphaerophoria scripta (L.), 1758	**M**	97	98	99	
Sphaerophoria taeniata (Meigen), 1822	**M**	97	98		
Sphaerophoria virgata Goeldlin, 1974	**M**	97	98		
Sphegina clunipes (Fallen), 1816	**M**	97	98	99	saproxylic
Sphegina elegans Schummel, 1843	**M**				saproxylic
Sphegina latifrons Egger, 1865	**M**	97	98		
Sphegina montana Becker, 1921	**M**		98	99	
Sphegina sibirica Stackelberg, 1953	**M**				
Sphegina spheginea (Zetterstedt), 1838	**M**		98		
Sphegina verecunda Collin, 1937					
Spilomyia manicata (Rondani), 1865	**M**		98		saproxylic
Syritta pipiens (L.), 1758	**M**	97	98		
Syrphus nitidifrons Becker, 1921	**M**		98		
Syrphus ribesii (L.), 1758	**M**	97	98	99	
Syrphus torvus Osten-Sacken, 1875	**M**	97	98	99	
Syrphus vitripennis Meigen, 1822	**M**	97	98	99	
Temnostoma apiforme (Fabricius), 1794	**M**			99	saproxylic
Temnostoma bombylans (Fabricius), 1805	**M**		98	99	saproxylic
Temnostoma vespiforme (L.), 1758	**M**	97	98	99	saproxylic
Trichopsomyia joratensis Goeldlin, 1997	**M**		98		
Volucella bombylans (L.), 1758	**M**	97		99	
Volucella inanis (L.), 1758	**M**	97	98		
Volucella inflata (Fabricius), 1794					saproxylic*
Volucella pellucens (L.), 1758	**M**	97	98	99	
Xanthandrus comtus (Harris), 1780	**M**	97	98	99	
Xanthogramma festiva (L.), 1758					
Xanthogramma laetum (Fabricius), 1794	**M**		98	99	
Xanthogramma pedissequum (Harris), 1776	**M**		98	99	
Xylota coeruleiventris Zetterstedt, 1838	**M**	97	98	99	saproxylic
Xylota florum (Fabricius), 1805	**M**		98		saproxylic
Xylota ignava (Panzer), 1798	**M**				saproxylic
Xylota segnis (L.), 1758	**M**	97	98	99	saproxylic
Xylota sylvarum (L.), 1758	**M**	97	98	99	saproxylic
Xylota xanthocnema Collin, 1939	**M**	97	98		saproxylic

station	RBL	RBL	RBL	RBL	RBL	RBL	RBL	RBL	RBL	RBL	RBL	RBL	RBL	RBL	RBL	RBL	RBL	RBL	RBL	RBL	RBL	RBL	RBL	RBL	RBL	RBL	RBL	RBL	RBL	RBL	RBL	RBL	RBL	RBL	RBL	RBL	RBL	RBL
stationcode	1	1	1	1	1	1	1	1	1	1	1	1	1	1	1	1	1	1	1	1	1	1	1	1	1	1	1	1	1	1	1	1	1	1	1	1	1	1
semaine	1	2	3	4	5	6	7	8	9	10	11	12	13	14	15	16	17	18	19	28	29	30	31	32	33	34	35	36	37	38	39	40	41	42	43	44	46
année	1	1	1	1	1	1	1	1	1	1	1	1	1	1	1	1	1	1	1	2	2	2	2	2	2	2	2	2	2	2	2	2	2	2	2	2	2
	23.5-30.5.97	30.5-6.6	6.6-13.6.97	13.6-20.6.97	20.6-27.6.97	27.6-4.7.97	4.7-11.7.97	11.7-18.7.97	18.7-25.7.97	25.7-31.7.97	1.8-8.8.97	8.8-15.8.97	15.8-22.8.97	22.8-29.8.97	29.8-5.9.97	5.9-12.9.97	12.9-19.9.97	19.9-26.9.97	26.9-3.10.97	14.5-22.5.98	22.5-28.5.98	28.5-4.6.98	4.6-11.6.98	11.6-18.6.98	18.6-25.6.98	25.6-2.7.98	2.7-9.7.98	9.7-16.7.98	16.7-23.7.98	23.7-30.7.98	30.7-6.8.98	6.8-13.8.98	13.8-20.8.98	20.8-27.8.98	27.8-3.9.98	3.9-10.9.98	17.9-24.9.98
Arctophila bombiformis								1	1		1		1	2	2											1			2									
Arctophila superbiens																																						
Baccha elongata												1	2	1											1	1	2	2	3			3	2	1	3		2
Blera fallax				1				2		1													2		2	3	2	2	1								
Brachyopa dorsata																																						
Brachyopa panzeri	1																								1													
Brachyopa scutellaris																																						
Brachyopa testacea		1	1	2			1	1														1	5					1									
Brachyopa vittata		2					1																2														
Brachypalpoides lentus							1																			1												
Brachypalpus laphriformis																									2	5												
Caliprobola speciosa																																						
Chalsosyrphus nemorum																																						
Cheilosia aerea																																						
Cheilosia albipila																																						
Cheilosia albitarsis			3				2					1											3		1				1									
Cheilosia antiqua	2		2																		1		1		1	1	1										
Cheilosia barbata										1		2															1		2	1	1				1		
Cheilosia bergenstammi																						1			1												
Cheilosia canicularis										3	2	1	1																				1				
Cheilosia chloris																																						
Cheilosia chrysocoma																																						
Cheilosia derasa								2	2	1			1													1		1	3	1		2	1				
Cheilosia faucis		1																							2													
Cheilosia flavipes			1																																			
Cheilosia fraterna																																						
Cheilosia frontalis																						1	3															
Cheilosia impressa																																						
Cheilosia impudens																												2	2									
Cheilosia lasiopa																									1													
Cheilosia lenis																																						
Cheilosia melanura																									1													

station	RBL	RBL	RBL	RBL	RBL	RBL	RBL	RBL	RBL	RBL	RBL	RBL	RBL	RBL	RBL	RBL	RBL	RBL	RBL	RBL	RBL	RBL	RBL	RBL	RBL	RBL	RBL	RBL	RBL	RBL	RBL	RBL	RBL	RBL	RBL	RBL	RBL	RBL
stationcode	1	1	1	1	1	1	1	1	1	1	1	1	1	1	1	1	1	1	1	1	1	1	1	1	1	1	1	1	1	1	1	1	1	1	1	1	1	1
semaine	1	2	3	4	5	6	7	8	9	10	11	12	13	14	15	16	17	18	19	28	29	30	31	32	33	34	35	36	37	38	39	40	41	42	43	44	46
année	1	1	1	1	1	1	1	1	1	1	1	1	1	1	1	1	1	1	1	2	2	2	2	2	2	2	2	2	2	2	2	2	2	2	2	2	2
	23.5-30.5.97	30.5-6.6	6.6-13.6.97	13.6-20.6.97	20.6-27.6.97	27.6-4.7.97	4.7-11.7.97	11.7-18.7.97	18.7-25.7.97	25.7-31.7.97	1.8-8.8.97	8.8-15.8.97	15.8-22.8.97	22.8-29.8.97	29.8-5.9.97	5.9-12.9.97	12.9-19.9.97	19.9-26.9.97	26.9-3.10.97	14.5-22.5.98	22.5-28.5.98	28.5-4.6.98	4.6-11.6.98	11.6-18.6.98	18.6-25.6.98	25.6-2.7.98	2.7-9.7.98	9.7-16.7.98	16.7-23.7.98	23.7-30.7.98	30.7-6.8.98	6.8-13.8.98	13.8-20.8.98	20.8-27.8.98	27.8-3.9.98	3.9-10.9.98	17.9-24.9.98
Cheilosia mutabilis												1	1															1		1		2	2	2			
Cheilosia nigripes												1																									
Cheilosia pagana																														2	1	1					
Cheilosia personata										1																		1	1	1	1						
Cheilosia proxima																							1														
Cheilosia psilophthalma																																					
Cheilosia pubera		2	1																																		
Cheilosia rhyncops	2	2	3	3																	1		4		7	5	1	2									
Cheilosia semifasciata																																					
Cheilosia soror																																					
Cheilosia urbana																						1															
Cheilosia variabilis																														1							
Cheilosia vernalis																											1		2	1							
Cheilosia vicina																									1							1					
Cheilosia vulpina																																					
Chrysogaster virescens																																					
Chrysotoxum arcuatum																																					
Chrysotoxum bicinctum							1																				1				1						
Chrysotoxum elegans							1																														
Chrysotoxum fasciatum			1	1				1	2	2	2												1						1	2							
Chrysotoxum fasciolatum				1																						1		1	1								
Chrysotomum intermedium											1									1			1		1					2	1	2	1				
Chrysotoxum vernale				1																																	
Criorhina asilica																																					
Chriorhina berberina			1	2		1		1		1										3	2				1			1									
Criorhina ranunculi																																					
Dasysyrphus albostriatus												1																				2		1			
Dasysyrphus friuliensis												1														1											
Dasysyrphus hilaris																																					
Dasysyrphus pinastri						1	2	4	2																2	1		1	1	1		1					
Dasysyrphus tricinctus														1																							
Dasysyrphus venustus/s.Doczkal																																					

station	RBL	RBL	RBL	RBL	RBL	RBL	RBL	RBL	RBL	RBL	RBL	RBL	RBL	RBL	RBL	RBL	RBL	RBL	RBL	RBL	RBL	RBL	RBL	RBL	RBL	RBL	RBL	RBL	RBL	RBL	RBL	RBL	RBL	RBL	RBL	RBL	RBL	RBL
stationcode	1	1	1	1	1	1	1	1	1	1	1	1	1	1	1	1	1	1	1	1	1	1	1	1	1	1	1	1	1	1	1	1	1	1	1	1	1	1
semaine	1	2	3	4	5	6	7	8	9	10	11	12	13	14	15	16	17	18	19	28	29	30	31	32	33	34	35	36	37	38	39	40	41	42	43	44	46
année	1	1	1	1	1	1	1	1	1	1	1	1	1	1	1	1	1	1	1	2	2	2	2	2	2	2	2	2	2	2	2	2	2	2	2	2	2
	23.5-30.5.97	30.5-6.6	6.6-13.6.97	13.6-20.6.97	20.6-27.6.97	27.6-4.7.97	4.7-11.7.97	11.7-18.7.97	18.7-25.7.97	25.7-31.7.97	1.8-8.8.97	8.8-15.8.97	15.8-22.8.97	22.8-29.8.97	29.8-5.9.97	5.9-12.9.97	12.9-19.9.97	19.9-26.9.97	26.9-3.10.97	14.5-22.5.98	22.5-28.5.98	28.5-4.6.98	4.6-11.6.98	11.6-18.6.98	18.6-25.6.98	25.6-2.7.98	2.7-9.7.98	9.7-16.7.98	16.7-23.7.98	23.7-30.7.98	30.7-6.8.98	6.8-13.8.98	13.8-20.8.98	20.8-27.8.98	27.8-3.9.98	3.9-10.9.98	17.9-24.9.98
Dasysyrphus venustus/s.Laska																																					
Didea fasciata																																					
Epistrophe diaphana																																					
Epistrophe eligans																																					
Epistrophe grossulariae								1	1	1	2															2		4									
Epistrophe melanostoma																																					
Epistrophe nitidicollis																							1			1											
Epistrophella euchroma																																					
Episyrphus balteatus							8	76	103	170	86	54	15	22	2	7	1							1	13	10	22	5	30	59	42	255	44	15	9	12	5
Eriozona erratica								1																													
Eriozona syrphoides																																					
Eristalis arbustorum										1																											
Eristalis interrupta											1	1																		1							
Eristalis jugorum																														1							
Eristalis pertinax								3	13	57	49	17														1		6	14	24	93	6				
Eristalis picea																											1										
Eristalis similis								4	13	45	52	4	2													2		4	25	26	70	4				
Eristalis tenax										2		1	3						1							1		5	2	3		1	2	1		
Eumerus flavitarsis																																					
Eumerus tarsalis																																					
Eupeodes bucculatus				1						1						1																					
Eupeodes corollae		1		1			1	6	9	19	19	7	3											1	2	5	3		11	8	11	33	10	1			
Eupeodes lapponicus										1		1														2	1		3	2							
Eupeodes latifasciatus	1		1								1														1	1		1									
Eupeodes luniger									2	3	4	2		1														1	2		2	1	1				1
Eupeodes nielseni												1																									
Eupeodes nitens								1		2	2														1	1	2	1		1							
Ferdinandea cuprea																																					
Helophilus pendulus								4	2	3	2	2	3	1													1	1	2	1	6	1					
Helophilus trivittatus											2		1			2			1													3					
Heringia pubescens																																					
Heringia vitripennis												1									1				1												

station	RBL	RBL	RBL	RBL	RBL	RBL	RBL	RBL	RBL	RBL	RBL	RBL	RBL	RBL	RBL	RBL	RBL	RBL	RBL	RBL	RBL	RBL	RBL	RBL	RBL	RBL	RBL	RBL	RBL	RBL	RBL	RBL	RBL	RBL	RBL	RBL	RBL	RBL
stationcode	1	1	1	1	1	1	1	1	1	1	1	1	1	1	1	1	1	1	1	1	1	1	1	1	1	1	1	1	1	1	1	1	1	1	1	1	1	1
semaine	1	2	3	4	5	6	7	8	9	10	11	12	13	14	15	16	17	18	19	28	29	30	31	32	33	34	35	36	37	38	39	40	41	42	43	44	46
année	1	1	1	1	1	1	1	1	1	1	1	1	1	1	1	1	1	1	1	2	2	2	2	2	2	2	2	2	2	2	2	2	2	2	2	2	2
	23.5-30.5.97	30.5-6.6	6.6-13.6.97	13.6-20.6.97	20.6-27.6.97	27.6-4.7.97	4.7-11.7.97	11.7-18.7.97	18.7-25.7.97	25.7-31.7.97	1.8-8.8.97	8.8-15.8.97	15.8-22.8.97	22.8-29.8.97	29.8-5.9.97	5.9-12.9.97	12.9-19.9.97	19.9-26.9.97	26.9-3.10.97	14.5-22.5.98	22.5-28.5.98	28.5-4.6.98	4.6-11.6.98	11.6-18.6.98	18.6-25.6.98	25.6-2.7.98	2.7-9.7.98	9.7-16.7.98	16.7-23.7.98	23.7-30.7.98	30.7-6.8.98	6.8-13.8.98	13.8-20.8.98	20.8-27.8.98	27.8-3.9.98	3.9-10.9.98	17.9-24.9.98
Leucozona glaucia																																	1				
Leucozona laternaria																																					
Leucozona lucorum																									1	1											
Melangyna compositarum																															1	1					
Melangyna lasiophthalma																																					
Melangyna umbellatarum												1																									
Melanostoma mellinum						1		2	1	8	4	5	1	1	1	2		2	1				1		6	8	13	5	25	14	5	2					
Melanostoma scalare		1	1	1	1		3	7	3	9	18	27	17	1	14	8	1									2	4	3	15	10	10	40	8	3	1		
Meligramma cincta	1						1	1	1			2															1			1		2					
Meligramma cingulata																							2														
Meligramma triangulifera																																					
Meliscaeva auricollis				2	1		1	3	1	21	30	15		2		2							1		2			1	6		6	19	3	1			
Meliscaeva cinctella	1					1				3	7	6	2	2	1														1	4		4	2				
Merodon aeneus																																					
Merodon cinereus								1	3	1	1																	1		1	1		1				
Merodon equetris																																					
Microdon analis																													2								
Microdon miki																																					
Myathropa florea						1			1																				2								
Neoascia podagrica										1																											
Neoascia tenur																																					
Orthonevra nobilis																																					
Paragus absidatus								1		2																											
Paragus haemorrhous																										1		1	3	6	1		1				
Paragus majoranae																												1									
Paragus punctulatus																																					
Paragus romanicus																																					
Parasyrphus annulatus																													5	1		6	1				
Parasyrphus lineolus									1	1											2								1		1				1		
Parasyrphus macularis																							2			1											
Parasyrphus malinellus																																					
Parasyrphus punctulatus																																					

station	RBL	RBL	RBL	RBL	RBL	RBL	RBL	RBL	RBL	RBL	RBL	RBL	RBL	RBL	RBL	RBL	RBL	RBL	RBL	RBL	RBL	RBL	RBL	RBL	RBL	RBL	RBL	RBL	RBL	RBL	RBL	RBL	RBL	RBL	RBL	RBL	RBL	RBL
stationcode	1	1	1	1	1	1	1	1	1	1	1	1	1	1	1	1	1	1	1	1	1	1	1	1	1	1	1	1	1	1	1	1	1	1	1	1	1	1
semaine	1	2	3	4	5	6	7	8	9	10	11	12	13	14	15	16	17	18	19	28	29	30	31	32	33	34	35	36	37	38	39	40	41	42	43	44	46
année	1	1	1	1	1	1	1	1	1	1	1	1	1	1	1	1	1	1	1	2	2	2	2	2	2	2	2	2	2	2	2	2	2	2	2	2	2
	23.5-30.5.97	30.5-6.6	6.6-13.6.97	13.6-20.6.97	20.6-27.6.97	27.6-4.7.97	4.7-11.7.97	11.7-18.7.97	18.7-25.7.97	25.7-31.7.97	1.8-8.8.97	8.8-15.8.97	15.8-22.8.97	22.8-29.8.97	29.8-5.9.97	5.9-12.9.97	12.9-19.9.97	19.9-26.9.97	26.9-3.10.97	14.5-22.5.98	22.5-28.5.98	28.5-4.6.98	4.6-11.6.98	11.6-18.6.98	18.6-25.6.98	25.6-2.7.98	2.7-9.7.98	9.7-16.7.98	16.7-23.7.98	23.7-30.7.98	30.7-6.8.98	6.8-13.8.98	13.8-20.8.98	20.8-27.8.98	27.8-3.9.98	3.9-10.9.98	17.9-24.9.98
Parasyrphus vittiger									1	1																				1								
Pipiza luteitarsis /s.Verlin.																																						
Pipiza quadrimaculata								1				1														2	2			3								
Pipizella viduata												2																	1			1						
Platycheirus abbruzensis																				1									1									
Platycheirus albimanus				1		1		13	4	31	71	32	16	14	7	9					1		1		4	22	30	23	59	42	66	71	31	14	5	3	3
Platycheirus angustatus										1	1																											
Platycheirus clypeatus					1				1	4													1			1												
Platycheirus europaeus			1						2	4	13	3		1							2					2			2				1					
Platycheirus immaculatus																									1													
Platycheirus manicatus																							1						1			2						
Platycheirus melanopsis																																						
Platycheirus nielseni																										1			2	1								
Platycheirus parmatus							1														1				1	1												
Platycheirus peltatus										1																				2	2		1		1			
Platycheirus scutatus									2	3	2	1													1	1	1		3	6	3	4	2	2				
Platycheirus splendidus																																						
Platycheirus tarsalis								1																				1										
Psilota anthracina																													1									
Rhingia borealis																																						
Rhingia campestris	1			1	1			2		1	1			1				1			1	1	14	2	10	4							1					
Rhingia rostrata																																						
Scaeva pyrastri								2	1	4	3	1	1		1	1									1		1		1									
Scaeva selenetica			2				2	6	4		3		1												1	5	3	1		3		2						
Sericomyia silentis																																						
Sphaerophoria bankowskae																																						
Sphaerophoria fatarum												2																										
Sphaerophoria infuscata	1			2				1		1													2			2	1	1	5	2								
Sphaerophoria interrupta								22	9	48	23	4														1			3	1	4	1						
Sphaerophoria scripta						1	1	12	8	25	33	29		2	2										2	1	6	3	14	29	24	131	31					
Sphaerophoria taeniata								2																				1										
Sphaerophoria virgata												1																				1						

station	RBL	RBL	RBL	RBL	RBL	RBL	RBL	RBL	RBL	RBL	RBL	RBL	RBL	RBL	RBL	RBL	RBL	RBL	RBL	RBL	RBL	RBL	RBL	RBL	RBL	RBL	RBL	RBL	RBL	RBL	RBL	RBL	RBL	RBL	RBL	RBL	RBL	RBL
stationcode	1	1	1	1	1	1	1	1	1	1	1	1	1	1	1	1	1	1	1	1	1	1	1	1	1	1	1	1	1	1	1	1	1	1	1	1	1	1
semaine	1	2	3	4	5	6	7	8	9	10	11	12	13	14	15	16	17	18	19	28	29	30	31	32	33	34	35	36	37	38	39	40	41	42	43	44	46
année	1	1	1	1	1	1	1	1	1	1	1	1	1	1	1	1	1	1	1	2	2	2	2	2	2	2	2	2	2	2	2	2	2	2	2	2	2
	23.5-30.5.97	30.5-6.6	6.6-13.6.97	13.6-20.6.97	20.6-27.6.97	27.6-4.7.97	4.7-11.7.97	11.7-18.7.97	18.7-25.7.97	25.7-31.7.97	1.8-8.8.97	8.8-15.8.97	15.8-22.8.97	22.8-29.8.97	29.8-5.9.97	5.9-12.9.97	12.9-19.9.97	19.9-26.9.97	26.9-3.10.97	14.5-22.5.98	22.5-28.5.98	28.5-4.6.98	4.6-11.6.98	11.6-18.6.98	18.6-25.6.98	25.6-2.7.98	2.7-9.7.98	9.7-16.7.98	16.7-23.7.98	23.7-30.7.98	30.7-6.8.98	6.8-13.8.98	13.8-20.8.98	20.8-27.8.98	27.8-3.9.98	3.9-10.9.98	17.9-24.9.98
Sphegina clunipes							1		1	1	7		1	1								1	1		1		1	3	12	15	12	40	17				
Sphegina latifrons																																					
Sphegina montana																																					
Sphegina spheginea																																					
Spilomyia manicata																																					
Syritta pipiens												1																	1			2	1				
Syrphus nitidifrons																																					
Syrphus ribesii						2	2		4	10	3		1		2										3	6	2	5		1		1		1		
Syrphus torvus			2	7	2	2	1	8	8	38	88	24	1			1							1		1	1		1	2	2	3		1		1	
Syrphus vitripennis								2	3	1	1	1	2															1		1	1					
Temnostoma apiforme																																					
Temnostoma bombylans																																					
Temnostoma vespiforme																									1												
Trichopsomyia joratensis																																					
Volucella bombylans								1																													
Volucella inanis												1																					1				
Volucella pellucens								1			1															1	2	2	2		1	1				
Xanthandrus comtus																																			1		
Xanthogramma laetum																																					
Xanthogramma pedissequum																																					
Xylota coeruleiventris				2		1	3	13	7	6	3	3		1								1	4		20	24	5	4	6	2	1	3	2				
Xylota florum																													1								
Xylota segnis			1				1	1		2	3	3	3	1	1	1		1				1			1	1	2		7	5	1	1	2		1		
Xylota sylvarum									1					1												1	1		1	1	1	2					
Xylota xanthocnema																																1					
ABONDANCE	10	10	21	29	6	12	35	211	217	543	542	265	79	56	33	34	2	4	3	5	12	8	55	4	95	128	123	78	277	281	262	811	182	43	25	16	11
RICHESSE	8	7	14	16	5	10	20	37	33	45	36	41	22	18	10	10	2	3	3	3	9	8	23	3	34	40	33	33	52	43	31	39	31	11	11	3	4

station	RBL	RBL	RBL	RBL	RBL	RBL	RBL	RBL	RBL	RBL	RBL	RBL	RBL	RBL	RBL	RBL	RBL	RBL	RBL
stationcode	1	1	1	1	1	1	1	1	1	1	1	1	1	1	1	1	1	1	1
semaine	54	55	56	57	58	59	60	61	62	63	64	65	66	67	68	69	70	71	72
année	3	3	3	3	3	3	3	3	3	3	3	3	3	3	3	3	3	3	3
	14.5.-21.5.99	21.5.-28.5.99	28.5.-4.6.99	4.6.-11.6.99	11.6-18.6.99	18.6-25.6.99	25.6.-2.7.99	2.7.-9.7.99	9.7.-16.7.99	16.7.-23.7.99	23.7.-30.7.99	30.7-6.8.99	6.8-13.8.99	13.8.-20.8.99	20.8.-27.8.99	27.8.-3.9.99	3.9.-10.9.99	10.9.-17.9.99	17.9.-24.9.99
Arctophila bombiformis									1	1		3		1	3	2		1	
Arctophila superbiens																			
Baccha elongata		1							2			1							
Blera fallax						1													
Brachyopa dorsata			3		1	1	1												
Brachyopa panzeri							1												
Brachyopa scutellaris																			
Brachyopa testacea			2	1			1	1											
Brachyopa vittata																			
Brachypalpoides lentus								1											
Brachypalpus laphriformis		2																	
Caliprobola speciosa																			
Chalsosyrphus nemorum																			
Cheilosia aerea																			
Cheilosia albipila																			
Cheilosia albitarsis			2		3				1										
Cheilosia antiqua		1	1		2	1		1											
Cheilosia barbata						1	1					1			1				
Cheilosia bergenstammi					1														
Cheilosia canicularis																			
Cheilosia chloris																			
Cheilosia chrysocoma																			
Cheilosia derasa							1		1	2	2		1						
Cheilosia faucis						1	1												
Cheilosia flavipes																			
Cheilosia fraterna		2																	
Cheilosia frontalis		2			1		2	1											
Cheilosia impressa																			
Cheilosia impudens				2				1	1										
Cheilosia lasiopa																			
Cheilosia lenis																			
Cheilosia melanura							1												

station	RBL	RBL	RBL	RBL	RBL	RBL	RBL	RBL	RBL	RBL	RBL	RBL	RBL	RBL	RBL	RBL	RBL	RBL	RBL
stationcode	1	1	1	1	1	1	1	1	1	1	1	1	1	1	1	1	1	1	1
semaine	54	55	56	57	58	59	60	61	62	63	64	65	66	67	68	69	70	71	72
année	3	3	3	3	3	3	3	3	3	3	3	3	3	3	3	3	3	3	3
	14.5.-21.5.99	21.5-28.5.99	28.5.-4.6.99	4.6.-11.6.99	11.6-18.6.99	18.6-25.6.99	25.6.-2.7.99	2.7.-9.7.99	9.7.-16.7.99	16.7.-23.7.99	23.7.-30.7.99	30.7-6.8.99	6.8-13.8.99	13.8.-20.8.99	20.8.-27.8.99	27.8.-3.9.99	3.9.-10.9.99	10.9.-17.9.99	17.9.-24.9.99
Cheilosia mutabilis															1				
Cheilosia nigripes																			
Cheilosia pagana											1		1						
Cheilosia personata								1	1										
Cheilosia proxima			3	1															
Cheilosia psilophthalma																			
Cheilosia pubera																			
Cheilosia rhyncops			5		1	6	6	6											
Cheilosia semifasciata																			
Cheilosia soror																			
Cheilosia urbana																			
Cheilosia variabilis		1																	
Cheilosia vernalis																			
Cheilosia vicina																			
Cheilosia vulpina																			
Chrysogaster virescens																			
Chrysotoxum arcuatum																			
Chrysotoxum bicinctum												1	1						
Chrysotoxum elegans							1												
Chrysotoxum fasciatum								1	1			2		1					
Chrysotoxum fasciolatum					1			1			1								
Chrysotomum intermedium								1		1									
Chrysotoxum vernale																			
Criorhina asilica		1																	
Chriorhina berberina		12	1	1	1	1	4	1											
Criorhina ranunculi																			
Dasysyrphus albostriatus				1															
Dasysyrphus friuliensis							1												
Dasysyrphus hilaris																			
Dasysyrphus pinastri							1												
Dasysyrphus tricinctus														1	1				
Dasysyrphus venustus/s.Doczkal					1														

station	RBL	RBL	RBL	RBL	RBL	RBL	RBL	RBL	RBL	RBL	RBL	RBL	RBL	RBL	RBL	RBL	RBL	RBL	RBL	RBL
stationcode	1	1	1	1	1	1	1	1	1	1	1	1	1	1	1	1	1	1	1	1
semaine	54	55	56	57	58	59	60	61	62	63	64	65	66	67	68	69	70	71	72
année	3	3	3	3	3	3	3	3	3	3	3	3	3	3	3	3	3	3	3
	14.5.-21.5.99	21.5-28.5.99	28.5.-4.6.99	4.6.-11.6.99	11.6-18.6.99	18.6-25.6.99	25.6.-2.7.99	2.7.-9.7.99	9.7.-16.7.99	16.7.-23.7.99	23.7.-30.7.99	30.7-6.8.99	6.8-13.8.99	13.8.-20.8.99	20.8.-27.8.99	27.8.-3.9.99	3.9.-10.9.99	10.9.-17.9.99	17.9.-24.9.99
Dasysyrphus venustus/s.Laska																			
Didea fasciata																			
Epistrophe diaphana																			
Epistrophe eligans			1																
Epistrophe grossulariae								1											
Epistrophe melanostoma																			
Epistrophe nitidicollis		1	1																
Epistrophella euchroma																			
Episyrphus balteatus						2		11	16	31	56	46	47	7	6		5	7	1
Eriozona erratica																			
Eriozona syrphoides																			
Eristalis arbustorum												1							
Eristalis interrupta																			
Eristalis jugorum														1					
Eristalis pertinax						2	3	2	3	24	364	416	481	195	67	6			
Eristalis picea																			
Eristalis similis											60	61	100	60	17				
Eristalis tenax									2	1		1	1		2	1			
Eumerus flavitarsis																			
Eumerus tarsalis																			
Eupeodes latilunulatus																			
Eupeodes corollae	1					2		1	9	10	8	7	12	10					
Eupeodes lapponicus											1								
Eupeodes latifasciatus																			
Eupeodes luniger										1	2	1			1				
Eupeodes nielseni									1										
Eupeodes nitens										1	1	1	2						
Ferdinandea cuprea																			
Helophilus pendulus							3	2	2	10	9	5	17	7	9	2			
Helophilus trivittatus						1					2	2		2	7				
Heringia pubescens		1	2							1		1							
Heringia vitripennis																			

station	RBL	RBL	RBL	RBL	RBL	RBL	RBL	RBL	RBL	RBL	RBL	RBL	RBL	RBL	RBL	RBL	RBL	RBL	RBL
stationcode	1	1	1	1	1	1	1	1	1	1	1	1	1	1	1	1	1	1	1
semaine	54	55	56	57	58	59	60	61	62	63	64	65	66	67	68	69	70	71	72
année	3	3	3	3	3	3	3	3	3	3	3	3	3	3	3	3	3	3	3
	14.5.-21.5.99	21.5-28.5.99	28.5.-4.6.99	4.6.-11.6.99	11.6-18.6.99	18.6-25.6.99	25.6.-2.7.99	2.7.-9.7.99	9.7.-16.7.99	16.7.-23.7.99	23.7.-30.7.99	30.7-6.8.99	6.8-13.8.99	13.8.-20.8.99	20.8.-27.8.99	27.8.-3.9.99	3.9.-10.9.99	10.9.-17.9.99	17.9.-24.9.99
Leucozona glaucia																			
Leucozona laternaria																			
Leucozona lucorum												1							
Melangyna compositarum																			
Melangyna lasiophthalma			16				1												
Melangyna umbellatarum																			
Melanostoma mellinum								2	4	2	1	10	11	4	29	2	4		
Melanostoma scalare					1	4	4	3	8	8	14	6	24	4	8	2	2	1	
Meligramma cincta			3		1														
Meligramma cingulata		1	4																
Meligramma triangulifera																			
Meliscaeva auricollis			2	1			2			1	2	2							
Meliscaeva cinctella						1					1	2	6	4	1	5	2		
Merodon aeneus																			
Merodon cinereus																			
Merodon equetris																			
Microdon analis								1											
Microdon miki																			
Myathropa florea										1	1		1						
Neoascia podagrica																			
Neoascia tenur																			
Orthonevra nobilis																			
Paragus absidatus																			
Paragus haemorrhous																			
Paragus majoranae																			
Paragus punctulatus																			
Paragus romanicus																			
Parasyrphus annulatus							1												
Parasyrphus lineolus																			
Parasyrphus macularis																			
Parasyrphus malinellus																			
Parasyrphus punctulatus			32		2	1	2												

station	RBL	RBL	RBL	RBL	RBL	RBL	RBL	RBL	RBL	RBL	RBL	RBL	RBL	RBL	RBL	RBL	RBL	RBL	RBL
stationcode	1	1	1	1	1	1	1	1	1	1	1	1	1	1	1	1	1	1	1
semaine	54	55	56	57	58	59	60	61	62	63	64	65	66	67	68	69	70	71	72
année	3	3	3	3	3	3	3	3	3	3	3	3	3	3	3	3	3	3	3
	14.5.-21.5.99	21.5-28.5.99	28.5.-4.6.99	4.6.-11.6.99	11.6-18.6.99	18.6-25.6.99	25.6.-2.7.99	2.7.-9.7.99	9.7.-16.7.99	16.7.-23.7.99	23.7.-30.7.99	30.7-6.8.99	6.8-13.8.99	13.8.-20.8.99	20.8.-27.8.99	27.8.-3.9.99	3.9.-10.9.99	10.9.-17.9.99	17.9.-24.9.99
Parasyrphus vittiger			2		2		1	1					1		1				
Pipiza luteitarsis /s.Verlin.																			
Pipiza quadrimaculata							5	6	2	2									
Pipizella viduata																			
Platycheirus abbruzensis																			
Platycheirus albimanus								2	2	14	15	8	34	18	17	5		2	2
Platycheirus angustatus																			
Platycheirus clypeatus																			
Platycheirus europaeus										1	4	6							
Platycheirus immaculatus																			
Platycheirus manicatus							1												
Platycheirus melanopsis																			
Platycheirus nielseni								3											
Platycheirus parmatus						2													
Platycheirus peltatus							1						2	1					
Platycheirus scutatus									1	1				1				1	
Platycheirus splendidus													1						
Platycheirus tarsalis																			
Psilota anthracina																			
Rhingia borealis																			
Rhingia campestris	1	3	1											1	1				
Rhingia rostrata																			
Scaeva pyrastri									1		1		1						
Scaeva selenetica							1	1		1		1						1	
Sericomyia silentis													1						
Sphaerophoria bankowskae																			
Sphaerophoria fatarum																			
Sphaerophoria infuscata							2	1	3	2	4								
Sphaerophoria interrupta																			
Sphaerophoria scripta							1	2	5	11	10	23	174	42	21	5	1		
Sphaerophoria taeniata																			
Sphaerophoria virgata																			

station	RBL	RBL	RBL	RBL	RBL	RBL	RBL	RBL	RBL	RBL	RBL	RBL	RBL	RBL	RBL	RBL	RBL	RBL	RBL
stationcode	1	1	1	1	1	1	1	1	1	1	1	1	1	1	1	1	1	1	1
semaine	54	55	56	57	58	59	60	61	62	63	64	65	66	67	68	69	70	71	72
année	3	3	3	3	3	3	3	3	3	3	3	3	3	3	3	3	3	3	3
	14.5.-21.5.99	21.5-28.5.99	28.5.-4.6.99	4.6.-11.6.99	11.6-18.6.99	18.6-25.6.99	25.6.-2.7.99	2.7.-9.7.99	9.7.-16.7.99	16.7.-23.7.99	23.7.-30.7.99	30.7-6.8.99	6.8-13.8.99	13.8.-20.8.99	20.8.-27.8.99	27.8.-3.9.99	3.9.-10.9.99	10.9.-17.9.99	17.9.-24.9.99
Sphegina clunipes			1		1	2	3	2	3	6	6	2	2	2		1			
Sphegina latifrons																			
Sphegina montana																			
Sphegina spheginea																			
Spilomyia manicata																			
Syritta pipiens																			
Syrphus nitidifrons																			
Syrphus ribesii							1			1		1		1					
Syrphus torvus																			
Syrphus vitripennis										2	16	3	7	1					
Temnostoma apiforme																			
Temnostoma bombylans								1											
Temnostoma vespiforme																			
Trichopsomyia joratensis																			
Volucella bombylans																			
Volucella inanis																			
Volucella pellucens							1	2		2	1	2							
Xanthandrus comtus													1				1		
Xanthogramma laetum																			
Xanthogramma pedissequum																			
Xylota coeruleiventris						1	1	1		1	1	1							
Xylota florum																			
Xylota segnis		1								6	7	1	4		1				
Xylota sylvarum									1	1			1	1	2	1			
Xylota xanthocnema																			
ABONDANCE	2	29	82	7	19	30	56	61	71	146	591	619	934	365	196	32	15	13	3
RICHESSE	2	13	18	6	14	17	31	30	23	29	27	31	26	22	20	11	6	6	2

station	LMO	LMO	LMO	LMO	LMO	LMO	LMO	LMO	LMO	LMO	LMO	LMO	LMO	LMO	LMO	LMO	LMO	LMO
stationcode	2	2	2	2	2	2	2	2	2	2	2	2	2	2	2	2	2	2
semaine	1	2	3	4	5	6	7	8	9	10	11	12	13	14	15	16	17	18
année	1	1	1	1	1	1	1	1	1	1	1	1	1	1	1	1	1	1
	23.5-30.5.97	30.5-6.6	6.6-13.6.97	13.6-20.6.97	20.6-27.6.97	27.6-4.7.97	4.7-11.7.97	11.7-18.7.97	18.7-25.7.97	25.7-31.7.97	1.8-8.8.97	8.8-15.8.97	15.8-22.8.97	22.8-29.8.97	29.8-5.9.97	5.9-12.9.97	12.9-19.9.97	19.9-26.9.97
Arctophila bombiformis									1		1							
Arctophila superbiens																		
Baccha elongata						1	1	6	8	6	3	3	2	1			2	
Blera fallax							1											
Brachyopa dorsata																		
Brachyopa panzeri																		
Brachyopa scutellaris																		
Brachyopa testacea																		
Brachyopa vittata																		
Brachypalpoides lentus				2		1	1	4										
Brachypalpus laphriformis																		
Caliprobola speciosa																		
Chalsosyrphus nemorum									1									
Cheilosia aerea																		
Cheilosia albipila																		
Cheilosia albitarsis																		
Cheilosia antiqua																		
Cheilosia barbata																		
Cheilosia bergenstammi																		
Cheilosia canicularis																		
Cheilosia chloris																		
Cheilosia chrysocoma																		
Cheilosia derasa																		
Cheilosia faucis																		
Cheilosia flavipes																		
Cheilosia fraterna																		
Cheilosia frontalis																		
Cheilosia impressa																		
Cheilosia impudens																		
Cheilosia lasiopa																		
Cheilosia lenis																		
Cheilosia melanura																		
Cheilosia mutabilis												1						
Cheilosia nigripes	1																	

station	LMO	LMO	LMO	LMO	LMO	LMO	LMO	LMO	LMO	LMO	LMO	LMO	LMO	LMO	LMO	LMO	LMO	LMO
stationcode	2	2	2	2	2	2	2	2	2	2	2	2	2	2	2	2	2	2
semaine	25	26	27	28	29	30	31	32	33	34	35	36	37	38	39	40	41	42	43	44	45	46
année	2	2	2	2	2	2	2	2	2	2	2	2	2	2	2	2	2	2	2	2	2	2
	22.4-30.4.98	30.4-7.5.98	7.5-14.5.98	14.5-22.5.98	22.5-28.5.98	28.5-4.6.98	4.6-11.6.98	11.6-18.6.98	18.6-25.6.98	25.6-2.7.98	2.7-9.7.98	9.7-16.7.98	16.7-23.7.98	23.7-30.7.98	30.7-6.8.98	6.8-13.8.98	13.8-20.8.98	20.8-27.8.98	27.8-3.9.98	3.9-10.9.98	10.9-17.9.98	17.9-24.9.98
Arctophila bombiformis																						
Arctophila superbiens																						
Baccha elongata			1	2			2						3	2	1	1	4		1	1		
Blera fallax									1		1											
Brachyopa dorsata																						
Brachyopa panzeri																						
Brachyopa scutellaris																						
Brachyopa testacea																						
Brachyopa vittata				1																		
Brachypalpoides lentus							1			1			1									
Brachypalpus laphriformis																						
Caliprobola speciosa																						
Chalsosyrphus nemorum																						
Cheilosia aerea			1																			
Cheilosia albipila																						
Cheilosia albitarsis			3	3	4			2														
Cheilosia antiqua			3																			
Cheilosia barbata			1	1																		
Cheilosia bergenstammi																						
Cheilosia canicularis																						
Cheilosia chloris		1																				
Cheilosia chrysocoma																						
Cheilosia derasa																						
Cheilosia faucis																						
Cheilosia flavipes																						
Cheilosia fraterna			2																			
Cheilosia frontalis																						
Cheilosia impressa			1																			
Cheilosia impudens			4	6	1																	
Cheilosia lasiopa																						
Cheilosia lenis																						
Cheilosia melanura																						
Cheilosia mutabilis																						
Cheilosia nigripes				1																		

GŒLDLIN *et al*. 2003. Les insectes indicateurs. ANNEXE 7.11

station	LMO	LMO	LMO	LMO	LMO	LMO	LMO	LMO	LMO	LMO	LMO	LMO	LMO	LMO	LMO	LMO	LMO	LMO	LMO	LMO	LMO	LMO	LMO	LMO	LMO	LMO	LMO	LMO	LMO	LMO	LMO	LMO	LMO	LMO	LMO	LMO	LMO	LMO	LMO	LMO	LMO	LMO
stationcode	2	2	2	2	2	2	2	2	2	2	2	2	2	2	2	2	2	2	2	2	2	2	2	2	2	2	2	2	2	2	2	2	2	2	2	2	2	2	2	2	2	2
semaine	1	2	3	4	5	6	7	8	9	10	11	12	13	14	15	16	17	18	25	26	27	28	29	30	31	32	33	34	35	36	37	38	39	40	41	42	43	44	45	46
année	1	1	1	1	1	1	1	1	1	1	1	1	1	1	1	1	1	1	2	2	2	2	2	2	2	2	2	2	2	2	2	2	2	2	2	2	2	2	2	2
	23.5-30.5.97	30.5-6.6	6.6-13.6.97	13.6-20.6.97	20.6-27.6.97	27.6-4.7.97	4.7-11.7.97	11.7-18.7.97	18.7-25.7.97	25.7-31.7.97	1.8-8.8.97	8.8-15.8.97	15.8-22.8.97	22.8-29.8.97	29.8-5.9.97	5.9-12.9.97	12.9-19.9.97	19.9-26.9.97	22.4-30.4.98	30.4-7.5.98	7.5-14.5.98	14.5-22.5.98	22.5-28.5.98	28.5-4.6.98	4.6-11.6.98	11.6-18.6.98	18.6-25.6.98	25.6-2.7.98	2.7-9.7.98	9.7-16.7.98	16.7-23.7.98	23.7-30.7.98	30.7-6.8.98	6.8-13.8.98	13.8-20.8.98	20.8-27.8.98	27.8-3.9.98	3.9-10.9.98	10.9-17.9.98	17.9-24.9.98
Cheilosia pagana										1			1						1								1		1		5			1						
Cheilosia personata																																								
Cheilosia proxima																																								
Cheilosia psilophthalma																						1		1																
Cheilosia pubera																																								
Cheilosia rhyncops																					1	3	1																	
Cheilosia semifasciata																																								
Cheilosia soror																																			1					
Cheilosia urbana																																								
Cheilosia variabilis																					1	1																		
Cheilosia vernalis																			1																					
Cheilosia vicina																																								
Cheilosia vulpina																																								
Chrysogaster virescens																						1																		
Chrysotoxum arcuatum																																								
Chrysotoxum bicinctum																															1			1						
Chrysotoxum elegans							1																							1										
Chrysotoxum fasciatum						1					2																				1	2									
Chrysotoxum fasciolatum							1																							1										
Chrysotomum intermedium	1							1				1	1		1								1		1							1		3	2		1	1		
Chrysotoxum vernale																																								
Criorhina asilica																							1																	
Chriorhina berberina																					5	17	4	2		2														
Criorhina ranunculi																						1																		
Dasysyrphus albostriatus											1										4	7																		
Dasysyrphus friuliensis																																								
Dasysyrphus hilaris																						1	1																	
Dasysyrphus pinastri										1											2	4	1		1							1		1						
Dasysyrphus tricinctus														1							1																			
Dasysyrphus venustus/s.Doczkal																							1																	
Dasysyrphus venustus/s.Laska																					3	6	1		1		1													
Didea fasciata																														1										
Epistrophe diaphana																																								
Epistrophe eligans																																								

station	LMO	LMO	LMO	LMO	LMO	LMO	LMO	LMO	LMO	LMO	LMO	LMO	LMO	LMO	LMO	LMO	LMO	LMO	LMO	LMO	LMO	LMO	LMO	LMO	LMO	LMO	LMO	LMO	LMO	LMO	LMO	LMO	LMO	LMO	LMO	LMO	LMO	LMO	LMO	LMO	LMO	LMO
stationcode	2	2	2	2	2	2	2	2	2	2	2	2	2	2	2	2	2	2	2	2	2	2	2	2	2	2	2	2	2	2	2	2	2	2	2	2	2	2	2	2	2	2
semaine	1	2	3	4	5	6	7	8	9	10	11	12	13	14	15	16	17	18	25	26	27	28	29	30	31	32	33	34	35	36	37	38	39	40	41	42	43	44	45	46
année	1	1	1	1	1	1	1	1	1	1	1	1	1	1	1	1	1	1	2	2	2	2	2	2	2	2	2	2	2	2	2	2	2	2	2	2	2	2	2	2
	23.5-30.5.97	30.5-6.6	6.6-13.6.97	13.6-20.6.97	20.6-27.6.97	27.6-4.7.97	4.7-11.7.97	11.7-18.7.97	18.7-25.7.97	25.7-31.7.97	1.8-8.8.97	8.8-15.8.97	15.8-22.8.97	22.8-29.8.97	29.8-5.9.97	5.9-12.9.97	12.9-19.9.97	19.9-26.9.97	22.4-30.4.98	30.4-7.5.98	7.5-14.5.98	14.5-22.5.98	22.5-28.5.98	28.5-4.6.98	4.6-11.6.98	11.6-18.6.98	18.6-25.6.98	25.6-2.7.98	2.7-9.7.98	9.7-16.7.98	16.7-23.7.98	23.7-30.7.98	30.7-6.8.98	6.8-13.8.98	13.8-20.8.98	20.8-27.8.98	27.8-3.9.98	3.9-10.9.98	10.9-17.9.98	17.9-24.9.98
Epistrophe grossulariae							1		1	7	2																												1	
Epistrophe melanostoma																																								
Epistrophe nitidicollis																							1																	
Epistrophella euchroma	1																				2	1																		
Episyrphus balteatus				2			42	52	48	65	37	79	77	22	25	24	4	1								9	3	13	6	6	19	25	25	111	31	3	20	3	5	2
Eriozona erratica																																								
Eriozona syrphoides									1	2																														
Eristalis arbustorum																																								
Eristalis interrupta										3		5																												
Eristalis jugorum										1	1	1	2	1	3		1																				2			
Eristalis pertinax	3							1	1	11	20	23	16	18	4				1		3	2	4			1								2						
Eristalis picea																																								
Eristalis similis										1	3	12	2	2	1																									
Eristalis tenax										1		2	2																			1								
Eumerus flavitarsis													1																		1									
Eumerus tarsalis																																								
Eupeodes bucculatus																																								
Eupeodes corollae												1	1																					6	1					
Eupeodes lapponicus			1	2			2			1											4	5	1		6									1						
Eupeodes latifasciatus																											1	1												
Eupeodes luniger										1	1																							1						
Eupeodes nielseni																																								
Eupeodes nitens								1																					1	1				1						
Ferdinandea cuprea																																								
Helophilus pendulus											3	3	5	1	2						1													1						
Helophilus trivittatus															1																									
Heringia pubescens																					9	9	2																	
Heringia vitripennis																					1																			

GŒLDLIN *et al*. 2003. Les insectes indicateurs. ANNEXE 7.13

station	LMO	LMO	LMO	LMO	LMO	LMO	LMO	LMO	LMO	LMO	LMO	LMO	LMO	LMO	LMO	LMO	LMO	LMO	LMO	LMO	LMO	LMO	LMO	LMO	LMO	LMO	LMO	LMO	LMO	LMO	LMO	LMO	LMO	LMO	LMO	LMO	LMO	LMO	LMO	LMO	LMO	LMO
stationcode	2	2	2	2	2	2	2	2	2	2	2	2	2	2	2	2	2	2	2	2	2	2	2	2	2	2	2	2	2	2	2	2	2	2	2	2	2	2	2	2	2	2
semaine	1	2	3	4	5	6	7	8	9	10	11	12	13	14	15	16	17	18	25	26	27	28	29	30	31	32	33	34	35	36	37	38	39	40	41	42	43	44	45	46
année	1	1	1	1	1	1	1	1	1	1	1	1	1	1	1	1	1	1	2	2	2	2	2	2	2	2	2	2	2	2	2	2	2	2	2	2	2	2	2	2
	23.5-30.5.97	30.5-6.6	6.6-13.6.97	13.6-20.6.97	20.6-27.6.97	27.6-4.7.97	4.7-11.7.97	11.7-18.7.97	18.7-25.7.97	25.7-31.7.97	1.8-8.8.97	8.8-15.8.97	15.8-22.8.97	22.8-29.8.97	29.8-5.9.97	5.9-12.9.97	12.9-19.9.97	19.9-26.9.97	22.4-30.4.98	30.4-7.5.98	7.5-14.5.98	14.5-22.5.98	22.5-28.5.98	28.5-4.6.98	4.6-11.6.98	11.6-18.6.98	18.6-25.6.98	25.6-2.7.98	2.7-9.7.98	9.7-16.7.98	16.7-23.7.98	23.7-30.7.98	30.7-6.8.98	6.8-13.8.98	13.8-20.8.98	20.8-27.8.98	27.8-3.9.98	3.9-10.9.98	10.9-17.9.98	17.9-24.9.98
Leucozona glaucia												2	5																													
Leucozona laternaria											2	1																														
Leucozona lucorum																																										
Melangyna compositarum													1									1																				
Melangyna lasiophthalma																			1	1																						
Melangyna umbellatarum																																										
Melanostoma mellinum								2		3	4	2	1				1				3	15	8	1		1	1	1	1	1	24	29	5	8	1							
Melanostoma scalare	1						1	5	4	3	4	10	8	5	8	4					6	5	1			1			1	2	13	6	4	6	10		5			1
Meligramma cincta							2	3	3	4	5										5	10	1			1					5	1						1		
Meligramma cingulata		1																			9	61	6																		
Meligramma triangulifera																							1																		
Meliscaeva auricollis		2		1		1				1	3	6	2	1	1	1					1		1							1		1		3						
Meliscaeva cinctella	1	1	1	1	1		2	2	1	21	13	21	9	9	3						12	16	1					1		1	5	3		2	2		5			
Merodon aeneus																																										
Merodon cinereus																																										
Merodon equetris	1																																									
Microdon analis																																										
Microdon miki																																										
Myathropa florea		1				1						1	1	1									1					1														
Neoascia podagrica												2										1						1		1	1			2								
Neoascia tenur																																										
Orthonevra nobilis																					1	1																				
Paragus absidatus																																										
Paragus haemorrhous																															1											
Paragus majoranae																																										
Paragus punctulatus																																										
Paragus romanicus																																										
Parasyrphus annulatus	1																						1													1						
Parasyrphus lineolus							1					1																														
Parasyrphus macularis	2																			1																						
Parasyrphus malinellus																					1	2																				
Parasyrphus punctulatus																					62	103	12			1	1															
Parasyrphus vittiger						1																																				
Pipiza luteitarsis /s.Verlin.																										1																

station	LMO	LMO	LMO	LMO	LMO	LMO	LMO	LMO	LMO	LMO	LMO	LMO	LMO	LMO	LMO	LMO	LMO	LMO	LMO	LMO	LMO	LMO	LMO	LMO	LMO	LMO	LMO	LMO	LMO	LMO	LMO	LMO	LMO	LMO	LMO	LMO	LMO	LMO	LMO	LMO	LMO	LMO
stationcode	2	2	2	2	2	2	2	2	2	2	2	2	2	2	2	2	2	2	2	2	2	2	2	2	2	2	2	2	2	2	2	2	2	2	2	2	2	2	2	2	2	2
semaine	1	2	3	4	5	6	7	8	9	10	11	12	13	14	15	16	17	18	25	26	27	28	29	30	31	32	33	34	35	36	37	38	39	40	41	42	43	44	45	46
année	1	1	1	1	1	1	1	1	1	1	1	1	1	1	1	1	1	1	2	2	2	2	2	2	2	2	2	2	2	2	2	2	2	2	2	2	2	2	2	2
	23.5-30.5.97	30.5-6.6	6.6-13.6.97	13.6-20.6.97	20.6-27.6.97	27.6-4.7.97	4.7-11.7.97	11.7-18.7.97	18.7-25.7.97	25.7-31.7.97	1.8-8.8.97	8.8-15.8.97	15.8-22.8.97	22.8-29.8.97	29.8-5.9.97	5.9-12.9.97	12.9-19.9.97	19.9-26.9.97	22.4-30.4.98	30.4-7.5.98	7.5-14.5.98	14.5-22.5.98	22.5-28.5.98	28.5-4.6.98	4.6-11.6.98	11.6-18.6.98	18.6-25.6.98	25.6-2.7.98	2.7-9.7.98	9.7-16.7.98	16.7-23.7.98	23.7-30.7.98	30.7-6.8.98	6.8-13.8.98	13.8-20.8.98	20.8-27.8.98	27.8-3.9.98	3.9-10.9.98	10.9-17.9.98	17.9-24.9.98
Platycheirus clypeatus											1																				1			1							
Platycheirus europaeus	1								12	28	31	46	38	11	1							1					1	1	1	2	77	42	8	24	4					
Platycheirus immaculatus																					11	21	8	1																
Platycheirus manicatus																																					1			
Platycheirus melanopsis																																								
Platycheirus nielseni											1																													
Platycheirus parmatus																					1																			
Platycheirus peltatus										3		1	1																		5	4			1					
Platycheirus scutatus								1	1	1	1	1	1	1																	2		1	1			1			
Platycheirus splendidus																																								
Platycheirus tarsalis								1																					1		1									
Psilota anthracina			1																																					
Rhingia borealis																															2									
Rhingia campestris									1			11	3		10	11	5				12	17	4	2		1			1					2	7		1			
Rhingia rostrata																																								
Scaeva pyrastri																																								
Scaeva selenetica												1																												
Sericomyia silentis																																								
Sphaerophoria bankowskae																																								
Sphaerophoria fatarum																																								
Sphaerophoria infuscata																																								
Sphaerophoria interrupta																																								
Sphaerophoria scripta												1			1		1																1	1	1					
Sphaerophoria taeniata																																1								
Sphaerophoria virgata																																								
Sphegina clunipes				1			1	6	3		2	3	7	4	4	1					2	2	2		2	2	4	2	1	8	13	1	1	5	7		2			
Sphegina latifrons	1																				1	1																		
Sphegina montana																													1											
Sphegina spheginea																					1																			
Spilomyia manicata																																1								
Syritta pipiens																																								
Syrphus nitidifrons	1																				2	13																		
Syrphus ribesii									1	8	1	5	1	3	2												1				1	1	1							
Syrphus torvus	1	4	2		1				1	6	7	6	2	6	1								1											2			1			

station	LMO	LMO	LMO	LMO	LMO	LMO	LMO	LMO	LMO	LMO	LMO	LMO	LMO	LMO	LMO	LMO	LMO	LMO	LMO	LMO	LMO	LMO	LMO	LMO	LMO	LMO	LMO	LMO	LMO	LMO	LMO	LMO	LMO	LMO	LMO	LMO	LMO	LMO	LMO	LMO	LMO
stationcode	2	2	2	2	2	2	2	2	2	2	2	2	2	2	2	2	2	2	2	2	2	2	2	2	2	2	2	2	2	2	2	2	2	2	2	2	2	2	2	2	2
semaine	1	2	3	4	5	6	7	8	9	10	11	12	13	14	15	16	17	18	25	26	27	28	29	30	31	32	33	34	35	36	37	38	39	40	41	42	43	44	45	46
année	1	1	1	1	1	1	1	1	1	1	1	1	1	1	1	1	1	1	2	2	2	2	2	2	2	2	2	2	2	2	2	2	2	2	2	2	2	2	2	2
	23.5-30.5.97	30.5-6.6	6.6-13.6.97	13.6-20.6.97	20.6-27.6.97	27.6-4.7.97	4.7-11.7.97	11.7-18.7.97	18.7-25.7.97	25.7-31.7.97	1.8-8.8.97	8.8-15.8.97	15.8-22.8.97	22.8-29.8.97	29.8-5.9.97	5.9-12.9.97	12.9-19.9.97	19.9-26.9.97	22.4-30.4.98	30.4-7.5.98	7.5-14.5.98	14.5-22.5.98	22.5-28.5.98	28.5-4.6.98	4.6-11.6.98	11.6-18.6.98	18.6-25.6.98	25.6-2.7.98	2.7-9.7.98	9.7-16.7.98	16.7-23.7.98	23.7-30.7.98	30.7-6.8.98	6.8-13.8.98	13.8-20.8.98	20.8-27.8.98	27.8-3.9.98	3.9-10.9.98	10.9-17.9.98	17.9-24.9.98
Volucella bombylans																																									
Volucella inanis																																									
Volucella pellucens										4	2	1	1																					1							
Xanthandrus comtus																																		1							
Xanthogramma laetum																								1																	
Xanthogramma pedissequum																																									
Xylota coeruleiventris									1	2	2			1								1	1																		
Xylota florum																																									
Xylota segnis	1	1	2				1			4	4	4	2	1	1							3	2	4	2	1		1	2	4	2	5	2	7	5		6	2	1	
Xylota sylvarum										1	1	1	3	1														1				1		3						
Xylota xanthocnema											1		2																	1	1									
ABONDANCE	17	10	8	11	2	6	60	89	92	196	159	260	203	94	72	43	14	1	5	3	185	247	77	13	17	24	19	31	23	32	189	130	49	201	81	4	46	8	7	3
RICHESSE	14	6	6	8	2	6	16	16	19	29	29	33	31	20	18	6	6	1	5	3	38	39	32	8	9	13	13	14	13	15	26	20	10	30	16	2	12	5	3	2

station	LMO	LMO	LMO	LMO	LMO	LMO	LMO	LMO	LMO	LMO	LMO	LMO	LMO	LMO	LMO	LMO	LMO	LMO	LMO	LMO	LMO
stationcode	2	2	2	2	2	2	2	2	2	2	2	2	2	2	2	2	2	2	2	2	2
semaine	52	53	54	55	56	57	58	59	60	61	62	63	64	65	66	67	68	69	70	71	72
année	3	3	3	3	3	3	3	3	3	3	3	3	3	3	3	3	3	3	3	3	3
	30.4-7.5.99	7.5.-14.5.99	14.5.-21.5.99	21.5-28.5.99	28.5.-4.6.99	4.6.-11.6.99	11.6-18.6.99	18.6-25.6.99	25.6.-2.7.99	2.7.-9.7.99	9.7.-16.7.99	16.7.-23.7.99	23.7.-30.7.99	30.7-6.8.99	6.8-13.8.99	13.8.-20.8.99	20.8.-27.8.99	27.8.-3.9.99	3.9.-10.9.99	10.9.-17.9.99	17.9.-24.9.99
Arctophila bombiformis								1													
Arctophila superbiens																				1	
Baccha elongata									1					1		1					3
Blera fallax							1														
Brachyopa dorsata																					
Brachyopa panzeri																					
Brachyopa scutellaris																					
Brachyopa testacea																					
Brachyopa vittata																					
Brachypalpoides lentus					1	2															
Brachypalpus laphriformis																					
Caliprobola speciosa					1						1										
Chalsosyrphus nemorum					1																
Cheilosia aerea																					
Cheilosia albipila																					
Cheilosia albitarsis								1													
Cheilosia antiqua		1	1																		
Cheilosia barbata					1				1												
Cheilosia bergenstammi																					
Cheilosia canicularis																					
Cheilosia chloris																					
Cheilosia chrysocoma																					
Cheilosia derasa																					
Cheilosia faucis																					
Cheilosia flavipes																					
Cheilosia fraterna					1																
Cheilosia frontalis				1	2																
Cheilosia impressa																					
Cheilosia impudens							1														
Cheilosia lasiopa																					
Cheilosia lenis																					
Cheilosia melanura																					
Cheilosia mutabilis																					

station	LMO	LMO	LMO	LMO	LMO	LMO	LMO	LMO	LMO	LMO	LMO	LMO	LMO	LMO	LMO	LMO	LMO	LMO	LMO	LMO	LMO
stationcode	2	2	2	2	2	2	2	2	2	2	2	2	2	2	2	2	2	2	2	2	2
semaine	52	53	54	55	56	57	58	59	60	61	62	63	64	65	66	67	68	69	70	71	72
année	3	3	3	3	3	3	3	3	3	3	3	3	3	3	3	3	3	3	3	3	3
	30.4-7.5.99	7.5.-14.5.99	14.5.-21.5.99	21.5-28.5.99	28.5.-4.6.99	4.6.-11.6.99	11.6-18.6.99	18.6-25.6.99	25.6.-2.7.99	2.7.-9.7.99	9.7.-16.7.99	16.7.-23.7.99	23.7.-30.7.99	30.7-6.8.99	6.8-13.8.99	13.8.-20.8.99	20.8.-27.8.99	27.8.-3.9.99	3.9.-10.9.99	10.9.-17.9.99	17.9.-24.9.99
Cheilosia nigripes					1																
Cheilosia pagana									1	1		2	2								
Cheilosia personata																					
Cheilosia proxima																					
Cheilosia psilophthalma																					
Cheilosia pubera																					
Cheilosia rhyncops																					
Cheilosia semifasciata	1																				
Cheilosia soror																					
Cheilosia urbana																					
Cheilosia variabilis																					
Cheilosia vernalis																					
Cheilosia vicina																					
Cheilosia vulpina																					
Chrysogaster virescens																					
Chrysotoxum arcuatum																					
Chrysotoxum bicinctum											1	1		1	1						
Chrysotoxum elegans																					
Chrysotoxum fasciatum									1	1		2		1							
Chrysotoxum fasciolatum										1				1							
Chrysotomum intermedium																					
Chrysotoxum vernale																					
Criorhina asilica					1			1													
Chriorhina berberina					6		1														
Criorhina ranunculi																					
Dasysyrphus albostriatus																					
Dasysyrphus friuliensis																					
Dasysyrphus hilaris																					
Dasysyrphus pinastri																					
Dasysyrphus tricinctus																					
Dasysyrphus venustus/s.Doczkal																					
Dasysyrphus venustus/s.Laska																					
Didea fasciata																					

station	LMO	LMO	LMO	LMO	LMO	LMO	LMO	LMO	LMO	LMO	LMO	LMO	LMO	LMO	LMO	LMO	LMO	LMO	LMO	LMO	LMO	LMO
stationcode	2	2	2	2	2	2	2	2	2	2	2	2	2	2	2	2	2	2	2	2	2	2
semaine	52	53	54	55	56	57	58	59	60	61	62	63	64	65	66	67	68	69	70	71	72
année	3	3	3	3	3	3	3	3	3	3	3	3	3	3	3	3	3	3	3	3	3
	30.4-7.5.99	7.5.-14.5.99	14.5.-21.5.99	21.5-28.5.99	28.5.-4.6.99	4.6.-11.6.99	11.6-18.6.99	18.6-25.6.99	25.6.-2.7.99	2.7.-9.7.99	9.7.-16.7.99	16.7.-23.7.99	23.7.-30.7.99	30.7-6.8.99	6.8-13.8.99	13.8.-20.8.99	20.8.-27.8.99	27.8.-3.9.99	3.9.-10.9.99	10.9.-17.9.99	17.9.-24.9.99
Epistrophe diaphana																					
Epistrophe eligans				1																	
Epistrophe grossulariae																					
Epistrophe melanostoma																					
Epistrophe nitidicollis																					
Epistrophella euchroma																					
Episyrphus balteatus									3	8	11	33	29	19	50	12	13	9		10	6
Eriozona erratica																					
Eriozona syrphoides																					
Eristalis arbustorum																					
Eristalis interrupta																					
Eristalis jugorum															1						
Eristalis pertinax	3				5						1		3	1	1		1			1	2
Eristalis picea																					
Eristalis similis												1					1				
Eristalis tenax																					
Eumerus flavitarsis																		1			
Eumerus tarsalis																					
Eupeodes bucculatus																					
Eupeodes corollae				1	1			1													
Eupeodes lapponicus	1																				
Eupeodes latifasciatus																					
Eupeodes luniger													1								
Eupeodes nielseni																					
Eupeodes nitens								1													
Ferdinandea cuprea																					
Helophilus pendulus										1		2	4	3	3	5	9			1	
Helophilus trivittatus																	2				
Heringia pubescens																					
Heringia vitripennis													1								

station	LMO	LMO	LMO	LMO	LMO	LMO	LMO	LMO	LMO	LMO	LMO	LMO	LMO	LMO	LMO	LMO	LMO	LMO	LMO	LMO	LMO
stationcode	2	2	2	2	2	2	2	2	2	2	2	2	2	2	2	2	2	2	2	2	2
semaine	52	53	54	55	56	57	58	59	60	61	62	63	64	65	66	67	68	69	70	71	72
année	3	3	3	3	3	3	3	3	3	3	3	3	3	3	3	3	3	3	3	3	3
	30.4-7.5.99	7.5.-14.5.99	14.5.-21.5.99	21.5-28.5.99	28.5.-4.6.99	4.6.-11.6.99	11.6-18.6.99	18.6-25.6.99	25.6.-2.7.99	2.7.-9.7.99	9.7.-16.7.99	16.7.-23.7.99	23.7.-30.7.99	30.7-6.8.99	6.8-13.8.99	13.8.-20.8.99	20.8.-27.8.99	27.8.-3.9.99	3.9.-10.9.99	10.9.-17.9.99	17.9.-24.9.99
Leucozona glaucia																					
Leucozona laternaria																					
Leucozona lucorum																					
Melangyna compositarum																					
Melangyna lasiophthalma	1	4	1	2																	
Melangyna umbellatarum																					
Melanostoma mellinum												1	3	7	1	4		2		2	
Melanostoma scalare						1					1	2	5	7	4	1	9	9		2	3
Meligramma cincta					1			1		1	1	3		1	1	1				2	
Meligramma cingulata																					
Meligramma triangulifera																					
Meliscaeva auricollis				1								1	1		1						
Meliscaeva cinctella			1					1	1	1	1	4	2	8	5	4	4	3	1	15	
Merodon aeneus																					
Merodon cinereus																					
Merodon equetris																					
Microdon analis																					
Microdon miki					1																
Myathropa florea									1				1								
Neoascia podagrica																					
Neoascia tenur																					
Orthonevra nobilis																					
Paragus absidatus																					
Paragus haemorrhous																					
Paragus majoranae																					
Paragus punctulatus																					
Paragus romanicus																					
Parasyrphus annulatus																					
Parasyrphus lineolus																					
Parasyrphus macularis										1											
Parasyrphus malinellus																					
Parasyrphus punctulatus	26	13	7	11	3	1	1	2	1	1											
Parasyrphus vittiger																					

station	LMO	LMO	LMO	LMO	LMO	LMO	LMO	LMO	LMO	LMO	LMO	LMO	LMO	LMO	LMO	LMO	LMO	LMO	LMO	LMO	LMO
stationcode	2	2	2	2	2	2	2	2	2	2	2	2	2	2	2	2	2	2	2	2	2
semaine	52	53	54	55	56	57	58	59	60	61	62	63	64	65	66	67	68	69	70	71	72
année	3	3	3	3	3	3	3	3	3	3	3	3	3	3	3	3	3	3	3	3	3
	30.4-7.5.99	7.5.-14.5.99	14.5.-21.5.99	21.5-28.5.99	28.5.-4.6.99	4.6.-11.6.99	11.6-18.6.99	18.6-25.6.99	25.6.-2.7.99	2.7.-9.7.99	9.7.-16.7.99	16.7.-23.7.99	23.7.-30.7.99	30.7-6.8.99	6.8-13.8.99	13.8.-20.8.99	20.8.-27.8.99	27.8.-3.9.99	3.9.-10.9.99	10.9.-17.9.99	17.9.-24.9.99
Pipiza luteitarsis /s.Verlin.																					
Pipiza quadrimaculata					2																
Pipizella viduata																					
Platycheirus abbruzensis																					
Platycheirus albimanus								1		1	2	2	6	1		1				2	2
Platycheirus angustatus																					
Platycheirus clypeatus																					
Platycheirus europaeus												6	43	50	12	4	10				
Platycheirus immaculatus		2																			
Platycheirus manicatus																					
Platycheirus melanopsis																					
Platycheirus nielseni																					
Platycheirus parmatus																					
Platycheirus peltatus														3	1	1		1			
Platycheirus scutatus			1									1									
Platycheirus splendidus														1							
Platycheirus tarsalis																					
Psilota anthracina																					
Rhingia borealis																1					
Rhingia campestris	2										2			1	1	4	4	19			
Rhingia rostrata				1																	
Scaeva pyrastri														1							
Scaeva selenetica																					
Sericomyia silentis																					
Sphaerophoria bankowskae																					
Sphaerophoria fatarum																					
Sphaerophoria infuscata																					
Sphaerophoria interrupta																					
Sphaerophoria scripta												1	1		1		1				
Sphaerophoria taeniata																					
Sphaerophoria virgata																					
Sphegina clunipes												1	1	2		1	5	2			
Sphegina latifrons																					

station	LMO	LMO	LMO	LMO	LMO	LMO	LMO	LMO	LMO	LMO	LMO	LMO	LMO	LMO	LMO	LMO	LMO	LMO	LMO	LMO	LMO
stationcode	2	2	2	2	2	2	2	2	2	2	2	2	2	2	2	2	2	2	2	2	2
semaine	52	53	54	55	56	57	58	59	60	61	62	63	64	65	66	67	68	69	70	71	72
année	3	3	3	3	3	3	3	3	3	3	3	3	3	3	3	3	3	3	3	3	3
	30.4-7.5.99	7.5.-14.5.99	14.5.-21.5.99	21.5-28.5.99	28.5.-4.6.99	4.6.-11.6.99	11.6-18.6.99	18.6-25.6.99	25.6.-2.7.99	2.7.-9.7.99	9.7.-16.7.99	16.7.-23.7.99	23.7.-30.7.99	30.7-6.8.99	6.8-13.8.99	13.8.-20.8.99	20.8.-27.8.99	27.8.-3.9.99	3.9.-10.9.99	10.9.-17.9.99	17.9.-24.9.99
Sphegina montana									1												
Sphegina spheginea																					
Spilomyia manicata																					
Syritta pipiens																					
Syrphus nitidifrons																					
Syrphus ribesii													1							1	
Syrphus torvus																					
Syrphus vitripennis												1	1								
Temnostoma apiforme							1														
Temnostoma bombylans					2			1													
Temnostoma vespiforme								2													
Trichopsomyia joratensis																					
Volucella bombylans																					
Volucella inanis																					
Volucella pellucens														3	1						
Xanthandrus comtus							1														
Xanthogramma laetum						1					1			1							
Xanthogramma pedissequum															1						
Xylota coeruleiventris										1											
Xylota florum																					
Xylota segnis						1		3		1	1	2	1	2	2		5	5			1
Xylota sylvarum												1	2	1	1						
Xylota xanthocnema																					
ABONDANCE	34	20	11	18	30	6	6	16	11	19	23	67	108	116	88	40	64	51	1	37	17
RICHESSE	6	4	5	7	16	5	6	12	9	12	11	19	19	22	18	13	12	9	1	10	6

GŒLDLIN *et al.* 2003. Les insectes indicateurs. ANNEXE 7.19

station	LDA	LDA	LDA	LDA	LDA	LDA	LDA	LDA	LDA	LDA	LDA	LDE	LDE	LDE	LDE	LDE	LDE	LDE	LDE	LDE	LDE	LDE	PES	PES	PES	PES	PES	PES	PES	PES	PES	PES	PES
stationcode	3	3	3	3	3	3	3	3	3	3	3	4	4	4	4	4	4	4	4	4	4	4	5	5	5	5	5	5	5	5	5	5	5
semaine	25	27	29	31	33	35	37	39	41	43	45	25	27	29	31	33	35	37	39	41	43	45	25	27	29	31	33	35	37	39	41	43	45
année	2	2	2	2	2	2	2	2	2	2	2	2	2	2	2	2	2	2	2	2	2	2	2	2	2	2	2	2	2	2	2	2	2
	22.4-30.4.98	7.5-14.5.98	22.5-28.5.98	4.6-11.6.98	18.6-25.6.98	2.7-9.7.98	16.7-23.7.98	30.7-6.8.98	13.8-20.8.98	27.8-3.9.98	10.9-17.9.98	22.4-30.4.98	7.5-14.5.98	22.5-28.5.98	4.6-11.6.98	18.6-25.6.98	2.7-9.7.98	16.7-23.7.98	30.7-6.8.98	13.8-20.8.98	27.8-3.9.98	10.9-17.9.98	22.4-30.4.98	7.5-14.5.98	22.5-28.5.98	4.6-11.6.98	18.6-25.6.98	2.7-9.7.98	16.7-23.7.98	30.7-6.8.98	13.8-20.8.98	27.8-3.9.98	10.9-17.9.98
Arctophila bombiformis																																	
Arctophila superbiens																																	
Baccha elongata			1	3				1		1											1			1									1
Blera fallax			1																					2	1	2							
Brachyopa dorsata																																	
Brachyopa panzeri																																	
Brachyopa scutellaris				1																													
Brachyopa testacea																																	
Brachyopa vittata																																	
Brachypalpoides lentus					2																						2						
Brachypalpus laphriformis				1									1																				
Caliprobola speciosa																																	
Chalsosyrphus nemorum																																	
Cheilosia aerea																														1			
Cheilosia albipila																							1										
Cheilosia albitarsis														1										2		1							
Cheilosia antiqua																																	
Cheilosia barbata																								1									
Cheilosia bergenstammi																								1									
Cheilosia canicularis																																	
Cheilosia chloris																																	
Cheilosia chrysocoma																																	
Cheilosia derasa																																	
Cheilosia faucis																																	
Cheilosia flavipes																								6									
Cheilosia fraterna																																	
Cheilosia frontalis																																	
Cheilosia impressa																										1							
Cheilosia impudens																									2								
Cheilosia lasiopa																																	
Cheilosia lenis																								1									
Cheilosia melanura																																	

station	LDA	LDA	LDA	LDA	LDA	LDA	LDA	LDA	LDA	LDA	LDA	LDE	LDE	LDE	LDE	LDE	LDE	LDE	LDE	LDE	LDE	LDE	PES	PES	PES	PES	PES	PES	PES	PES	PES	PES	PES
stationcode	3	3	3	3	3	3	3	3	3	3	3	4	4	4	4	4	4	4	4	4	4	4	5	5	5	5	5	5	5	5	5	5	5
semaine	25	27	29	31	33	35	37	39	41	43	45	25	27	29	31	33	35	37	39	41	43	45	25	27	29	31	33	35	37	39	41	43	45
année	2	2	2	2	2	2	2	2	2	2	2	2	2	2	2	2	2	2	2	2	2	2	2	2	2	2	2	2	2	2	2	2	2
	22.4-30.4.98	7.5-14.5.98	22.5-28.5.98	4.6-11.6.98	18.6-25.6.98	2.7-9.7.98	16.7-23.7.98	30.7-6.8.98	13.8-20.8.98	27.8-3.9.98	10.9-17.9.98	22.4-30.4.98	7.5-14.5.98	22.5-28.5.98	4.6-11.6.98	18.6-25.6.98	2.7-9.7.98	16.7-23.7.98	30.7-6.8.98	13.8-20.8.98	27.8-3.9.98	10.9-17.9.98	22.4-30.4.98	7.5-14.5.98	22.5-28.5.98	4.6-11.6.98	18.6-25.6.98	2.7-9.7.98	16.7-23.7.98	30.7-6.8.98	13.8-20.8.98	27.8-3.9.98	10.9-17.9.98
Cheilosia mutabilis							1																							1			
Cheilosia nigripes																								1									
Cheilosia pagana					1											1										1		1	2				
Cheilosia personata																																	
Cheilosia proxima																								1									
Cheilosia psilophthalma																																	
Cheilosia pubera																																	
Cheilosia rhyncops																																	
Cheilosia semifasciata																																	
Cheilosia soror								1																								1	
Cheilosia urbana																																	
Cheilosia variabilis																										1							
Cheilosia vernalis																																	
Cheilosia vicina																																	
Cheilosia vulpina					1																												
Chrysogaster virescens																																	
Chrysotoxum arcuatum																										1							
Chrysotoxum bicinctum							2		1																				2				
Chrysotoxum elegans																																	
Chrysotoxum fasciatum			1								1							2													1	1	
Chrysotoxum fasciolatum																											1						
Chrysotomum intermedium		1					2	3	4	2		1					1		1	4	2			1			1		3	1		4	
Chrysotoxum vernale																																	
Criorhina asilica			1																														
Chriorhina berberina		1			1									1										2	1		3	1	1				
Criorhina ranunculi																																	
Dasysyrphus albostriatus									1				3																1			1	
Dasysyrphus friuliensis																																	
Dasysyrphus hilaris																																	
Dasysyrphus pinastri																1																	
Dasysyrphus tricinctus																																	
Dasysyrphus venustus/s.Doczkal																																	

GŒLDLIN *et al.* 2003. Les insectes indicateurs. ANNEXE 7.21

station	LDA	LDA	LDA	LDA	LDA	LDA	LDA	LDA	LDA	LDA	LDA	LDE	LDE	LDE	LDE	LDE	LDE	LDE	LDE	LDE	LDE	LDE	PES	PES	PES	PES	PES	PES	PES	PES	PES	PES	PES
stationcode	3	3	3	3	3	3	3	3	3	3	3	4	4	4	4	4	4	4	4	4	4	4	5	5	5	5	5	5	5	5	5	5	5
semaine	25	27	29	31	33	35	37	39	41	43	45	25	27	29	31	33	35	37	39	41	43	45	25	27	29	31	33	35	37	39	41	43	45
année	2	2	2	2	2	2	2	2	2	2	2	2	2	2	2	2	2	2	2	2	2	2	2	2	2	2	2	2	2	2	2	2	2
	22.4-30.4.98	7.5-14.5.98	22.5-28.5.98	4.6-11.6.98	18.6-25.6.98	2.7-9.7.98	16.7-23.7.98	30.7-6.8.98	13.8-20.8.98	27.8-3.9.98	10.9-17.9.98	22.4-30.4.98	7.5-14.5.98	22.5-28.5.98	4.6-11.6.98	18.6-25.6.98	2.7-9.7.98	16.7-23.7.98	30.7-6.8.98	13.8-20.8.98	27.8-3.9.98	10.9-17.9.98	22.4-30.4.98	7.5-14.5.98	22.5-28.5.98	4.6-11.6.98	18.6-25.6.98	2.7-9.7.98	16.7-23.7.98	30.7-6.8.98	13.8-20.8.98	27.8-3.9.98	10.9-17.9.98
Dasysyrphus venustus/s.Laska																1									2								
Didea fasciata																																	
Epistrophe diaphana																												1					
Epistrophe eligans																								2	1								
Epistrophe grossulariae																						1											
Epistrophe melanostoma		1																						1									
Epistrophe nitidicollis				1																				3	3	1	2						
Epistrophella euchroma		2																						2		1							
Episyrphus balteatus			1		6	15	9	18	14	7	4					10	2	6	4	9	14	1				1	12	15	14	2	8	3	1
Eriozona erratica																																	
Eriozona syrphoides																																	
Eristalis arbustorum																																	
Eristalis interrupta																																	
Eristalis jugorum																																	
Eristalis pertinax																									1				1				
Eristalis picea																																	
Eristalis similis																																	
Eristalis tenax																																	
Eumerus flavitarsis																																	
Eumerus tarsalis																																	
Eupeodes bucculatus																																	
Eupeodes corollae			1					3	2									1	1	1							3	4	3		1		
Eupeodes lapponicus				1	2								8											1			1		1				
Eupeodes latifasciatus			1		1		1																	2	1	2	1		1				
Eupeodes luniger					3																						2						
Eupeodes nielseni																																	
Eupeodes nitens					1	1				2							1		1									1	1				1
Ferdinandea cuprea		1																															
Helophilus pendulus										1																	1						
Helophilus trivittatus																																	
Heringia pubescens																		1						1									
Heringia vitripennis																														1			

station	LDA	LDA	LDA	LDA	LDA	LDA	LDA	LDA	LDA	LDA	LDA	LDE	LDE	LDE	LDE	LDE	LDE	LDE	LDE	LDE	LDE	LDE	PES	PES	PES	PES	PES	PES	PES	PES	PES	PES	PES
stationcode	3	3	3	3	3	3	3	3	3	3	3	4	4	4	4	4	4	4	4	4	4	4	5	5	5	5	5	5	5	5	5	5	5
semaine	25	27	29	31	33	35	37	39	41	43	45	25	27	29	31	33	35	37	39	41	43	45	25	27	29	31	33	35	37	39	41	43	45
année	2	2	2	2	2	2	2	2	2	2	2	2	2	2	2	2	2	2	2	2	2	2	2	2	2	2	2	2	2	2	2	2	2
	22.4-30.4.98	7.5-14.5.98	22.5-28.5.98	4.6-11.6.98	18.6-25.6.98	2.7-9.7.98	16.7-23.7.98	30.7-6.8.98	13.8-20.8.98	27.8-3.9.98	10.9-17.9.98	22.4-30.4.98	7.5-14.5.98	22.5-28.5.98	4.6-11.6.98	18.6-25.6.98	2.7-9.7.98	16.7-23.7.98	30.7-6.8.98	13.8-20.8.98	27.8-3.9.98	10.9-17.9.98	22.4-30.4.98	7.5-14.5.98	22.5-28.5.98	4.6-11.6.98	18.6-25.6.98	2.7-9.7.98	16.7-23.7.98	30.7-6.8.98	13.8-20.8.98	27.8-3.9.98	10.9-17.9.98
Leucozona glaucia																																	
Leucozona laternaria																																	
Leucozona lucorum																																	
Melangyna compositarum																																	
Melangyna lasiophthalma		1										1																					
Melangyna umbellatarum																													1				
Melanostoma mellinum						3	5	2										1	1					7	4	1	5	30	36	8	4		
Melanostoma scalare		2		1	2	1	1	1	3	1			3	1			1							2	1	1		4	3	2	2	2	
Meligramma cincta					2	1	1	1	2	1			7			1	1	2			1			5	2	1	1	4	6	1	1	1	
Meligramma cingulata													3											3	2								
Meligramma triangulifera																																	
Meliscaeva auricollis					1			1	1		1										1						2	2		1	1		1
Meliscaeva cinctella		3	1									1	10	2					1	1	5			2			2		1	1			
Merodon aeneus																																	
Merodon cinereus																																	
Merodon equetris																																	
Microdon analis					1																												
Microdon miki																																	
Myathropa florea					1															1					1		1						
Neoascia podagrica								2	2									1											1		1		
Neoascia tenur																												1	1				
Orthonevra nobilis																																	
Paragus absidatus																																	
Paragus haemorrhous							1																				3	1	7	3		1	
Paragus majoranae				1	1	2	1	2																				1	1	1	2	2	1
Paragus punctulatus																																	
Paragus romanicus																											2						
Parasyrphus annulatus																																	
Parasyrphus lineolus																									1								
Parasyrphus macularis		1																						1									
Parasyrphus malinellus																									1	1							
Parasyrphus punctulatus		4											30			4								5	1								

GŒLDLIN *et al.* 2003. Les insectes indicateurs. ANNEXE 7.23

station	LDA	LDA	LDA	LDA	LDA	LDA	LDA	LDA	LDA	LDA	LDA	LDE	LDE	LDE	LDE	LDE	LDE	LDE	LDE	LDE	LDE	LDE	PES	PES	PES	PES	PES	PES	PES	PES	PES	PES	PES
stationcode	3	3	3	3	3	3	3	3	3	3	3	4	4	4	4	4	4	4	4	4	4	4	5	5	5	5	5	5	5	5	5	5	5
semaine	25	27	29	31	33	35	37	39	41	43	45	25	27	29	31	33	35	37	39	41	43	45	25	27	29	31	33	35	37	39	41	43	45
année	2	2	2	2	2	2	2	2	2	2	2	2	2	2	2	2	2	2	2	2	2	2	2	2	2	2	2	2	2	2	2	2	2
	22.4-30.4.98	7.5-14.5.98	22.5-28.5.98	4.6-11.6.98	18.6-25.6.98	2.7-9.7.98	16.7-23.7.98	30.7-6.8.98	13.8-20.8.98	27.8-3.9.98	10.9-17.9.98	22.4-30.4.98	7.5-14.5.98	22.5-28.5.98	4.6-11.6.98	18.6-25.6.98	2.7-9.7.98	16.7-23.7.98	30.7-6.8.98	13.8-20.8.98	27.8-3.9.98	10.9-17.9.98	22.4-30.4.98	7.5-14.5.98	22.5-28.5.98	4.6-11.6.98	18.6-25.6.98	2.7-9.7.98	16.7-23.7.98	30.7-6.8.98	13.8-20.8.98	27.8-3.9.98	10.9-17.9.98
Parasyrphus vittiger																																	1
Pipiza luteitarsis /s.Verlin.																																	
Pipiza quadrimaculata																									1								
Pipizella viduata						1																				1	2	1	3		1		
Platycheirus abbruzensis																																	
Platycheirus albimanus		1		3	1	4	1			1			2			1		2						2	1		3	10					1
Platycheirus angustatus				1	1																												
Platycheirus clypeatus																									1			1					
Platycheirus europaeus			1		2		23	1	2									3		1				6	2	2	6	6	46	12	6	1	
Platycheirus immaculatus		1	1										4											3	1								
Platycheirus manicatus																																	
Platycheirus melanopsis																																	
Platycheirus nielseni																																	
Platycheirus parmatus																									1		1						
Platycheirus peltatus							2																						1		2		
Platycheirus scutatus				2	1				1		1					1					1			2			2	5	2				1
Platycheirus splendidus																																	
Platycheirus tarsalis																1	1								1	1	1	2	2				
Psilota anthracina																																	
Rhingia borealis																																	
Rhingia campestris			2	1							1			3										25	14	2	1				5	2	
Rhingia rostrata																																	
Scaeva pyrastri					1																								2		1		
Scaeva selenetica																																	
Sericomyia silentis																																	
Sphaerophoria bankowskae							1																				1		3				
Sphaerophoria fatarum																																	
Sphaerophoria infuscata																											1						
Sphaerophoria interrupta					1		1									1										1	2		4				
Sphaerophoria scripta					1	5	8	1	3	1														2	1	3	8	16	30	6	10	1	
Sphaerophoria taeniata							7	1	1																		1	13	44	2	1		
Sphaerophoria virgata							1																										

station	LDA	LDA	LDA	LDA	LDA	LDA	LDA	LDA	LDA	LDA	LDA	LDE	LDE	LDE	LDE	LDE	LDE	LDE	LDE	LDE	LDE	LDE	PES	PES	PES	PES	PES	PES	PES	PES	PES	PES	PES
stationcode	3	3	3	3	3	3	3	3	3	3	3	4	4	4	4	4	4	4	4	4	4	4	5	5	5	5	5	5	5	5	5	5	5
semaine	25	27	29	31	33	35	37	39	41	43	45	25	27	29	31	33	35	37	39	41	43	45	25	27	29	31	33	35	37	39	41	43	45
année	2	2	2	2	2	2	2	2	2	2	2	2	2	2	2	2	2	2	2	2	2	2	2	2	2	2	2	2	2	2	2	2	2
	22.4-30.4.98	7.5-14.5.98	22.5-28.5.98	4.6-11.6.98	18.6-25.6.98	2.7-9.7.98	16.7-23.7.98	30.7-6.8.98	13.8-20.8.98	27.8-3.9.98	10.9-17.9.98	22.4-30.4.98	7.5-14.5.98	22.5-28.5.98	4.6-11.6.98	18.6-25.6.98	2.7-9.7.98	16.7-23.7.98	30.7-6.8.98	13.8-20.8.98	27.8-3.9.98	10.9-17.9.98	22.4-30.4.98	7.5-14.5.98	22.5-28.5.98	4.6-11.6.98	18.6-25.6.98	2.7-9.7.98	16.7-23.7.98	30.7-6.8.98	13.8-20.8.98	27.8-3.9.98	10.9-17.9.98
Sphegina clunipes			1		1														1								2	1	1				
Sphegina latifrons																																	
Sphegina montana																																	
Sphegina spheginea																																	
Spilomyia manicata																																	
Syritta pipiens							1																										
Syrphus nitidifrons																																	
Syrphus ribesii									1		1																1	1			1		
Syrphus torvus													1											2									
Syrphus vitripennis																											1	1					
Temnostoma apiforme																																	
Temnostoma bombylans				1											1											1	2						
Temnostoma vespiforme																												1					
Trichopsomyia joratensis																																	
Volucella bombylans																																	
Volucella inanis																																	
Volucella pellucens								1								1																	
Xanthandrus comtus																																	
Xanthogramma laetum																											2		1				
Xanthogramma pedissequum										1																	1		2				
Xylota coeruleiventris																																	
Xylota florum																																	
Xylota segnis			1		1		1	1	2				1	1						1				1	1	1			3	1	3		1
Xylota sylvarum							1		1												1						1						
Xylota xanthocnema																																	
ABONDANCE	0	19	14	17	36	33	71	40	41	18	9	3	73	9	1	23	7	19	10	18	26	2	1	99	49	28	84	124	231	44	51	20	9
RICHESSE	0	12	13	12	24	9	21	16	16	10	6	3	12	6	1	11	6	9	7	7	8	2	1	33	26	22	37	25	34	16	18	12	9

GŒLDLIN *et al.* 2003. Les insectes indicateurs. ANNEXE 7.25

station	CVE	CVE	CVE	CVE	CVE	CVE	CVE	CVE	CVE	CVE	CMO	CMO	CMO	CMO	CMO	CMO	CMO	CMO	CMO	CMO	LSO	LSO	LSO	LSO	LSO	LSO	LSO	LSO	LSO	LSO
stationcode	6	6	6	6	6	6	6	6	6	6	7	7	7	7	7	7	7	7	7	7	8	8	8	8	8	8	8	8	8	8
semaine	55	57	59	61	63	65	67	69	71	72	55	57	59	61	63	65	67	69	71	72	55	57	59	61	63	65	67	69	71	72
année	3	3	3	3	3	3	3	3	3	3	3	3	3	3	3	3	3	3	3	3	3	3	3	3	3	3	3	3	3	3
	21.5-28.5.99	4.6.-11.6.99	18.6-25.6.99	2.7.-9.7.99	16.7.-23.7.99	30.7-6.8.99	13.8.-20.8.99	27.8.-3.9.99	10.9.-17.9.99	17.9.-24.9.99	21.5-28.5.99	4.6.-11.6.99	18.6-25.6.99	2.7.-9.7.99	16.7.-23.7.99	30.7-6.8.99	13.8.-20.8.99	27.8.-3.9.99	10.9.-17.9.99	17.9.-24.9.99	21.5-28.5.99	4.6.-11.6.99	18.6-25.6.99	2.7.-9.7.99	16.7.-23.7.99	30.7-6.8.99	13.8.-20.8.99	27.8.-3.9.99	10.9.-17.9.99	17.9.-24.9.99
Arctophila bombiformis															2	1	1	2		1						1	1	1	2	
Arctophila superbiens																														
Baccha elongata																														
Blera fallax															1								2	2	3	1				
Brachyopa dorsata																														
Brachyopa panzeri																														
Brachyopa scutellaris																														
Brachyopa testacea		1												2											1					
Brachyopa vittata													1																	
Brachypalpoides lentus			1																											
Brachypalpus laphriformis	3	1	1																				2							
Caliprobola speciosa																														
Chalsosyrphus nemorum																														
Cheilosia aerea																														
Cheilosia albipila																														
Cheilosia albitarsis													1									2								
Cheilosia antiqua												1	1										2							
Cheilosia barbata					2																		1		1	4				
Cheilosia bergenstammi																														
Cheilosia canicularis																1										1				
Cheilosia chloris																														
Cheilosia chrysocoma	1																													
Cheilosia derasa														1									2		3	1				
Cheilosia faucis												1	1									4	1	1						
Cheilosia flavipes																						1								
Cheilosia fraterna																														
Cheilosia frontalis													1									1								
Cheilosia impressa																														
Cheilosia impudens														1										4	2					
Cheilosia lasiopa																														
Cheilosia lenis																														
Cheilosia melanura																							1							
Cheilosia mutabilis					2																				1	5	1			

station	CVE	CVE	CVE	CVE	CVE	CVE	CVE	CVE	CVE	CVE	CMO	CMO	CMO	CMO	CMO	CMO	CMO	CMO	CMO	CMO	LSO	LSO	LSO	LSO	LSO	LSO	LSO	LSO	LSO	LSO
stationcode	6	6	6	6	6	6	6	6	6	6	7	7	7	7	7	7	7	7	7	7	8	8	8	8	8	8	8	8	8	8
semaine	55	57	59	61	63	65	67	69	71	72	55	57	59	61	63	65	67	69	71	72	55	57	59	61	63	65	67	69	71	72
année	3	3	3	3	3	3	3	3	3	3	3	3	3	3	3	3	3	3	3	3	3	3	3	3	3	3	3	3	3	3
	21.5-28.5.99	4.6.-11.6.99	18.6-25.6.99	2.7.-9.7.99	16.7.-23.7.99	30.7-6.8.99	13.8.-20.8.99	27.8.-3.9.99	10.9.-17.9.99	17.9.-24.9.99	21.5-28.5.99	4.6.-11.6.99	18.6-25.6.99	2.7.-9.7.99	16.7.-23.7.99	30.7-6.8.99	13.8.-20.8.99	27.8.-3.9.99	10.9.-17.9.99	17.9.-24.9.99	21.5-28.5.99	4.6.-11.6.99	18.6-25.6.99	2.7.-9.7.99	16.7.-23.7.99	30.7-6.8.99	13.8.-20.8.99	27.8.-3.9.99	10.9.-17.9.99	17.9.-24.9.99
Cheilosia nigripes		1																												
Cheilosia pagana				1																				1		2				
Cheilosia personata																														
Cheilosia proxima																														
Cheilosia psilophthalma																														
Cheilosia pubera																														
Cheilosia rhyncops	1											3		3								2	3	3						
Cheilosia semifasciata																														
Cheilosia soror									1																					
Cheilosia urbana												1	2																	
Cheilosia variabilis																														
Cheilosia vernalis																						1								
Cheilosia vicina																														
Cheilosia vulpina																														
Chrysogaster virescens																														
Chrysotoxum arcuatum																														
Chrysotoxum bicinctum			1	1											1															
Chrysotoxum elegans																														
Chrysotoxum fasciatum			1			1		1					1	1	1								1							
Chrysotoxum fasciolatum						1										2														
Chrysotomum intermedium				1	2		1	3	1	1						1							1							
Chrysotoxum vernale																														
Criorhina asilica																														
Chriorhina berberina	1	1		1																			1							
Criorhina ranunculi																														
Dasysyrphus albostriatus															1															
Dasysyrphus friuliensis																														
Dasysyrphus hilaris																														
Dasysyrphus pinastri														2																
Dasysyrphus tricinctus																														
Dasysyrphus venustus/s.Doczkal																							1							
Dasysyrphus venustus/s.Laska																														
Didea fasciata																														

station	CVE	CVE	CVE	CVE	CVE	CVE	CVE	CVE	CVE	CVE	CMO	CMO	CMO	CMO	CMO	CMO	CMO	CMO	CMO	CMO	LSO	LSO	LSO	LSO	LSO	LSO	LSO	LSO	LSO	LSO
stationcode	6	6	6	6	6	6	6	6	6	6	7	7	7	7	7	7	7	7	7	7	8	8	8	8	8	8	8	8	8	8
semaine	55	57	59	61	63	65	67	69	71	72	55	57	59	61	63	65	67	69	71	72	55	57	59	61	63	65	67	69	71	72
année	3	3	3	3	3	3	3	3	3	3	3	3	3	3	3	3	3	3	3	3	3	3	3	3	3	3	3	3	3	3
	21.5-28.5.99	4.6.-11.6.99	18.6-25.6.99	2.7.-9.7.99	16.7.-23.7.99	30.7-6.8.99	13.8.-20.8.99	27.8.-3.9.99	10.9.-17.9.99	17.9.-24.9.99	21.5-28.5.99	4.6.-11.6.99	18.6-25.6.99	2.7.-9.7.99	16.7.-23.7.99	30.7-6.8.99	13.8.-20.8.99	27.8.-3.9.99	10.9.-17.9.99	17.9.-24.9.99	21.5-28.5.99	4.6.-11.6.99	18.6-25.6.99	2.7.-9.7.99	16.7.-23.7.99	30.7-6.8.99	13.8.-20.8.99	27.8.-3.9.99	10.9.-17.9.99	17.9.-24.9.99
Epistrophe diaphana																														
Epistrophe eligans	1																													
Epistrophe grossulariae																														
Epistrophe melanostoma																														
Epistrophe nitidicollis																														
Epistrophella euchroma	1																													
Episyrphus balteatus				10	33	28	4	3		1				3	16	8								6	21	15			1	1
Eriozona erratica																														
Eriozona syrphoides																														
Eristalis arbustorum															2											2				
Eristalis interrupta																														
Eristalis jugorum																														
Eristalis pertinax															2	5	1									3	1	3		
Eristalis picea																														
Eristalis similis															6	8		1								2				
Eristalis tenax								2							4	2	1							1	1					
Eumerus flavitarsis				1	1	1			1																					
Eumerus tarsalis				1	1	1																								
Eupeodes bucculatus																														
Eupeodes corollae		1			9	2	2				2			3	40	10								3	10	3	1			
Eupeodes lapponicus															1															
Eupeodes latifasciatus																														
Eupeodes luniger															2											2		1		
Eupeodes nielseni															2															
Eupeodes nitens							1	2	1	1						3			1							1				
Ferdinandea cuprea																														
Helophilus pendulus					6										2	1									6	7	5	6		
Helophilus trivittatus																1								3		1		2		
Heringia pubescens	1																													
Heringia vitripennis																														

station	CVE	CVE	CVE	CVE	CVE	CVE	CVE	CVE	CVE	CVE	CMO	CMO	CMO	CMO	CMO	CMO	CMO	CMO	CMO	CMO	LSO	LSO	LSO	LSO	LSO	LSO	LSO	LSO	LSO	LSO
stationcode	6	6	6	6	6	6	6	6	6	6	7	7	7	7	7	7	7	7	7	7	8	8	8	8	8	8	8	8	8	8
semaine	55	57	59	61	63	65	67	69	71	72	55	57	59	61	63	65	67	69	71	72	55	57	59	61	63	65	67	69	71	72
année	3	3	3	3	3	3	3	3	3	3	3	3	3	3	3	3	3	3	3	3	3	3	3	3	3	3	3	3	3	3
	21.5-28.5.99	4.6.-11.6.99	18.6-25.6.99	2.7.-9.7.99	16.7.-23.7.99	30.7-6.8.99	13.8.-20.8.99	27.8.-3.9.99	10.9.-17.9.99	17.9.-24.9.99	21.5-28.5.99	4.6.-11.6.99	18.6-25.6.99	2.7.-9.7.99	16.7.-23.7.99	30.7-6.8.99	13.8.-20.8.99	27.8.-3.9.99	10.9.-17.9.99	17.9.-24.9.99	21.5-28.5.99	4.6.-11.6.99	18.6-25.6.99	2.7.-9.7.99	16.7.-23.7.99	30.7-6.8.99	13.8.-20.8.99	27.8.-3.9.99	10.9.-17.9.99	17.9.-24.9.99
Leucozona glaucia																														
Leucozona laternaria																														
Leucozona lucorum																														
Melangyna compositarum																														
Melangyna lasiophthalma											1		1										1							
Melangyna umbellatarum																														
Melanostoma mellinum					1	11	1	6	1					5	4	7	2	6	1				2	2	8	6	2	12	4	
Melanostoma scalare				1	9		1	3			1		2		2			1	4			1	1	4	10	9	2	1	2	
Meligramma cincta			1		2	2	1																							
Meligramma cingulata	2																													
Meligramma triangulifera																														
Meliscaeva auricollis	1				2	1	1	1								1								3	2					
Meliscaeva cinctella						1		1						1	1											2		1		
Merodon aeneus																							1							
Merodon cinereus															2															
Merodon equetris																														
Microdon analis																														
Microdon miki																														
Myathropa florea																								1						
Neoascia podagrica																														
Neoascia tenur																														
Orthonevra nobilis																														
Paragus absidatus																														
Paragus haemorrhous																														
Paragus majoranae																														
Paragus punctulatus															1															
Paragus romanicus																														
Parasyrphus annulatus																							1							
Parasyrphus lineolus																			1											
Parasyrphus macularis																														
Parasyrphus malinellus																														
Parasyrphus punctulatus	10	1	1								2		3	3							7	3	3							
Parasyrphus vittiger	1												1	1	1									1	1					

GŒLDLIN *et al.* 2003. Les insectes indicateurs. ANNEXE 7.29

station	CVE	CVE	CVE	CVE	CVE	CVE	CVE	CVE	CVE	CVE	CMO	CMO	CMO	CMO	CMO	CMO	CMO	CMO	CMO	CMO	LSO	LSO	LSO	LSO	LSO	LSO	LSO	LSO	LSO	LSO
stationcode	6	6	6	6	6	6	6	6	6	6	7	7	7	7	7	7	7	7	7	7	8	8	8	8	8	8	8	8	8	8
semaine	55	57	59	61	63	65	67	69	71	72	55	57	59	61	63	65	67	69	71	72	55	57	59	61	63	65	67	69	71	72
année	3	3	3	3	3	3	3	3	3	3	3	3	3	3	3	3	3	3	3	3	3	3	3	3	3	3	3	3	3	3
	21.5-28.5.99	4.6.-11.6.99	18.6-25.6.99	2.7.-9.7.99	16.7.-23.7.99	30.7-6.8.99	13.8.-20.8.99	27.8.-3.9.99	10.9.-17.9.99	17.9.-24.9.99	21.5-28.5.99	4.6.-11.6.99	18.6-25.6.99	2.7.-9.7.99	16.7.-23.7.99	30.7-6.8.99	13.8.-20.8.99	27.8.-3.9.99	10.9.-17.9.99	17.9.-24.9.99	21.5-28.5.99	4.6.-11.6.99	18.6-25.6.99	2.7.-9.7.99	16.7.-23.7.99	30.7-6.8.99	13.8.-20.8.99	27.8.-3.9.99	10.9.-17.9.99	17.9.-24.9.99
Pipiza luteitarsis /s.Verlin.																														
Pipiza quadrimaculata														1										3	1					
Pipizella viduata																														
Platycheirus abbruzensis																														
Platycheirus albimanus		1				3	2				1			3	2	10	1		1					9	28	11	2	15	16	4
Platycheirus angustatus						1																								
Platycheirus clypeatus						1																								
Platycheirus europaeus					16	17								1											1	5				
Platycheirus immaculatus																														
Platycheirus manicatus										1					1								2	1						
Platycheirus melanopsis													1		1															
Platycheirus nielseni																														
Platycheirus parmatus	1																													
Platycheirus peltatus																														
Platycheirus scutatus														1	1															
Platycheirus splendidus						1																			1					
Platycheirus tarsalis																									1					
Psilota anthracina																														
Rhingia borealis																														
Rhingia campestris	2							1				1		1				2				1	2		2			5	2	
Rhingia rostrata																														
Scaeva pyrastri					1									1	1	3									2	1				
Scaeva selenetica															8	26			4						4	3			1	
Sericomyia silentis																														
Sphaerophoria bankowskae																														
Sphaerophoria fatarum													2	1						1				1						
Sphaerophoria infuscata																							2	4	2					
Sphaerophoria interrupta											1																			
Sphaerophoria scripta				1	9	1								1	29	8	6							2	13	14	16	7	1	
Sphaerophoria taeniata																														
Sphaerophoria virgata																														
Sphegina clunipes													1											1						
Sphegina latifrons																														

station	CVE	CVE	CVE	CVE	CVE	CVE	CVE	CVE	CVE	CVE	CMO	CMO	CMO	CMO	CMO	CMO	CMO	CMO	CMO	CMO	LSO	LSO	LSO	LSO	LSO	LSO	LSO	LSO	LSO	LSO
stationcode	6	6	6	6	6	6	6	6	6	6	7	7	7	7	7	7	7	7	7	7	8	8	8	8	8	8	8	8	8	8
semaine	55	57	59	61	63	65	67	69	71	72	55	57	59	61	63	65	67	69	71	72	55	57	59	61	63	65	67	69	71	72
année	3	3	3	3	3	3	3	3	3	3	3	3	3	3	3	3	3	3	3	3	3	3	3	3	3	3	3	3	3	3
	21.5-28.5.99	4.6.-11.6.99	18.6-25.6.99	2.7.-9.7.99	16.7.-23.7.99	30.7-6.8.99	13.8.-20.8.99	27.8.-3.9.99	10.9.-17.9.99	17.9.-24.9.99	21.5-28.5.99	4.6.-11.6.99	18.6-25.6.99	2.7.-9.7.99	16.7.-23.7.99	30.7-6.8.99	13.8.-20.8.99	27.8.-3.9.99	10.9.-17.9.99	17.9.-24.9.99	21.5-28.5.99	4.6.-11.6.99	18.6-25.6.99	2.7.-9.7.99	16.7.-23.7.99	30.7-6.8.99	13.8.-20.8.99	27.8.-3.9.99	10.9.-17.9.99	17.9.-24.9.99
Sphegina montana																														
Sphegina spheginea																														
Spilomyia manicata																														
Syritta pipiens																														
Syrphus nitidifrons																														
Syrphus ribesii																							1		1	2				
Syrphus torvus											1																			
Syrphus vitripennis					2	1									1	12								1	2	4				
Temnostoma apiforme																														
Temnostoma bombylans																														
Temnostoma vespiforme																														
Trichopsomyia joratensis																														
Volucella bombylans																								1						
Volucella inanis																														
Volucella pellucens																									1					
Xanthandrus comtus																1								1						
Xanthogramma laetum																														
Xanthogramma pedissequum																														
Xylota coeruleiventris			1				1																1	1	2		1			
Xylota florum																														
Xylota segnis				4	2	3													1					2	2	3			1	
Xylota sylvarum					1		1								1											1				
Xylota xanthocnema																														
ABONDANCE	26	7	7	22	101	77	16	23	5	4	9	7	19	36	139	111	12	12	13	2	7	16	35	62	133	112	32	54	30	5
RICHESSE	13	7	7	10	18	18	11	10	5	4	7	5	14	20	30	20	6	5	7	2	1	9	23	26	29	28	10	11	9	2

GŒLDLIN *et al.* 2003. Les insectes indicateurs. ANNEXE 7.31

	ABONDANCE	FREQUENCE
Arctophila bombiformis	38	0.150837989
Arctophila superbiens	1	0.005586592
Baccha elongata	94	0.262569832
Blera fallax	36	0.12849162
Brachyopa dorsata	6	0.022346369
Brachyopa panzeri	3	0.016759777
Brachyopa scutellaris	1	0.005586592
Brachyopa testacea	22	0.083798883
Brachyopa vittata	7	0.027932961
Brachypalpoides lentus	22	0.083798883
Brachypalpus laphriformis	18	0.05027933
Caliprobola speciosa	2	0.011173184
Chalsosyrphus nemorum	2	0.011173184
Cheilosia aerea	2	0.011173184
Cheilosia albipila	1	0.005586592
Cheilosia albitarsis	37	0.106145251
Cheilosia antiqua	24	0.100558659
Cheilosia barbata	26	0.111731844
Cheilosia bergenstammi	4	0.022346369
Cheilosia canicularis	10	0.039106145
Cheilosia chloris	1	0.005586592
Cheilosia chrysocoma	1	0.005586592
Cheilosia derasa	29	0.106145251
Cheilosia faucis	13	0.05027933
Cheilosia flavipes	8	0.016759777
Cheilosia fraterna	5	0.016759777
Cheilosia frontalis	15	0.055865922
Cheilosia impressa	2	0.011173184
Cheilosia impudens	29	0.072625698
Cheilosia lasiopa	1	0.005586592
Cheilosia lenis	1	0.005586592
Cheilosia melanura	3	0.016759777
Cheilosia mutabilis	23	0.083798883
Cheilosia nigripes	6	0.033519553
Cheilosia pagana	33	0.134078212
Cheilosia personata	7	0.039106145

	ABONDANCE	FREQUENCE
Cheilosia proxima	6	0.022346369
Cheilosia psilophthalma	2	0.011173184
Cheilosia pubera	3	0.011173184
Cheilosia rhyncops	74	0.134078212
Cheilosia semifasciata	1	0.005586592
Cheilosia soror	4	0.022346369
Cheilosia urbana	4	0.016759777
Cheilosia variabilis	5	0.027932961
Cheilosia vernalis	6	0.027932961
Cheilosia vicina	2	0.011173184
Cheilosia vulpina	1	0.005586592
Chrysogaster virescens	1	0.005586592
Chrysotoxum arcuatum	1	0.005586592
Chrysotoxum bicinctum	19	0.094972067
Chrysotoxum elegans	4	0.022346369
Chrysotoxum fasciatum	42	0.184357542
Chrysotoxum fasciolatum	15	0.078212291
Chrysotomum intermedium	69	0.251396648
Chrysotoxum vernale	1	0.005586592
Criorhina asilica	5	0.027932961
Chriorhina berberina	86	0.195530726
Criorhina ranunculi	1	0.005586592
Dasysyrphus albostriatus	24	0.067039106
Dasysyrphus friuliensis	3	0.016759777
Dasysyrphus hilaris	2	0.011173184
Dasysyrphus pinastri	31	0.111731844
Dasysyrphus tricinctus	5	0.027932961
Dasysyrphus venustus/s.Doczk	3	0.016759777
Dasysyrphus venustus/s.Laska	15	0.039106145
Didea fasciata	1	0.005586592
Epistrophe diaphana	1	0.005586592
Epistrophe eligans	6	0.027932961
Epistrophe grossulariae	25	0.072625698
Epistrophe melanostoma	2	0.011173184
Epistrophe nitidicollis	15	0.055865922
Epistrophella euchroma	10	0.039106145

	ABONDANCE	FREQUENCE
Episyrphus balteatus	2589	0.636871508
Eriozona erratica	1	0.005586592
Eriozona syrphoides	3	0.011173184
Eristalis arbustorum	6	0.022346369
Eristalis interrupta	11	0.027932961
Eristalis jugorum	15	0.061452514
Eristalis pertinax	1991	0.301675978
Eristalis picea	1	0.005586592
Eristalis similis	589	0.162011173
Eristalis tenax	47	0.150837989
Eumerus flavitarsis	7	0.039106145
Eumerus tarsalis	3	0.016759777
Eupeodes bucculatus	3	0.016759777
Eupeodes corollae	329	0.318435754
Eupeodes lapponicus	50	0.134078212
Eupeodes latifasciatus	18	0.089385475
Eupeodes luniger	39	0.134078212
Eupeodes nielseni	4	0.016759777
Eupeodes nitens	40	0.17877095
Ferdinandea cuprea	1	0.005586592
Helophilus pendulus	174	0.262569832
Helophilus trivittatus	33	0.089385475
Heringia pubescens	28	0.055865922
Heringia vitripennis	6	0.033519553

	ABONDANCE	FREQUENCE
Leucozona glaucia	8	0.016759777
Leucozona laternaria	3	0.011173184
Leucozona lucorum	3	0.016759777
Melangyna compositarum	4	0.022346369
Melangyna lasiophthalma	32	0.072625698
Melangyna umbellatarum	2	0.011173184
Melanostoma mellinum	497	0.497206704
Melanostoma scalare	543	0.61452514
Meligramma cincta	115	0.30726257
Meligramma cingulata	94	0.061452514
Meligramma triangulifera	1	0.005586592
Meliscaeva auricollis	181	0.340782123
Meliscaeva cinctella	278	0.424581006
Merodon aeneus	1	0.005586592
Merodon cinereus	12	0.05027933
Merodon equetris	1	0.005586592
Microdon analis	4	0.016759777
Microdon miki	1	0.005586592
Myathropa florea	21	0.111731844
Neoascia podagrica	16	0.067039106
Neoascia tenur	2	0.011173184
Orthonevra nobilis	2	0.011173184
Paragus absidatus	3	0.011173184
Paragus haemorrhous	30	0.072625698
Paragus majoranae	16	0.067039106
Paragus punctulatus	1	0.005586592
Paragus romanicus	2	0.005586592
Parasyrphus annulatus	18	0.05027933
Parasyrphus lineolus	11	0.055865922
Parasyrphus macularis	9	0.039106145
Parasyrphus malinellus	5	0.022346369
Parasyrphus punctulatus	256	0.184357542
Parasyrphus vittiger	19	0.094972067
Pipiza luteitarsis /s.Verlin.	1	0.005586592
Pipiza quadrimaculata	33	0.083798883
Pipizella viduata	16	0.061452514

	ABONDANCE	FREQUENCE
Platycheirus abbruzensis	2	0.011173184
Platycheirus albimanus	904	0.547486034
Platycheirus angustatus	6	0.033519553
Platycheirus clypeatus	14	0.061452514
Platycheirus europaeus	656	0.324022346
Platycheirus immaculatus	54	0.061452514
Platycheirus manicatus	11	0.05027933
Platycheirus melanopsis	2	0.011173184
Platycheirus nielseni	8	0.027932961
Platycheirus parmatus	10	0.05027933
Platycheirus peltatus	37	0.117318436
Platycheirus scutatus	70	0.240223464
Platycheirus splendidus	4	0.022346369
Platycheirus tarsalis	15	0.072625698
Psilota anthracina	2	0.011173184
Rhingia borealis	3	0.011173184
Rhingia campestris	245	0.346368715
Rhingia rostrata	1	0.005586592
Scaeva pyrastri	34	0.134078212
Scaeva selenetica	85	0.134078212
Sericomyia silentis	1	0.005586592
Sphaerophoria bankowskae	5	0.016759777
Sphaerophoria fatarum	7	0.027932961
Sphaerophoria infuscata	39	0.106145251
Sphaerophoria interrupta	127	0.094972067
Sphaerophoria scripta	863	0.374301676
Sphaerophoria taeniata	74	0.061452514
Sphaerophoria virgata	3	0.016759777
Sphegina clunipes	253	0.374301676
Sphegina latifrons	3	0.016759777
Sphegina montana	2	0.011173184
Sphegina spheginea	1	0.005586592
Spilomyia manicata	1	0.005586592
Syritta pipiens	6	0.027932961
Syrphus nitidifrons	16	0.016759777
Syrphus ribesii	83	0.217877095

	ABONDANCE	FREQUENCE
Syrphus torvus	240	0.212290503
Syrphus vitripennis	77	0.173184358
Temnostoma apiforme	1	0.005586592
Temnostoma bombylans	12	0.055865922
Temnostoma vespiforme	10	0.05027933
Trichopsomyia joratensis	1	0.005586592
Volucella bombylans	2	0.011173184
Volucella inanis	2	0.011173184
Volucella pellucens	35	0.12849162
Xanthandrus comtus	7	0.039106145
Xanthogramma laetum	7	0.033519553
Xanthogramma pedissequum	5	0.022346369
Xylota coeruleiventris	133	0.217877095
Xylota florum	1	0.005586592
Xylota segnis	192	0.48603352
Xylota sylvarum	41	0.189944134
Xylota xanthocnema	6	0.027932961